Kawasaki

MICRO-K

PARTS CATALOG

Year & Model	**’10 KLE650CAF**
Color	1. Metallic Spark Black (660)
	2. Pearl Solar Yellow (10A)
VIN No. Range	JKALE650CCA000001 ～
Engine No. Range	ER650AE000001 ～

’10 KLE650 CAF

(VERSYS)

Publications A-2
Model Identification A-4
Engine B-1
Chassis E-1

© Kawasaki Heavy Industries, Ltd. 2009

Engine No. Location:
Upper crankcase, front side

Year & Model	Owner’s Manual	A&P Manual		Service Manual		Microfiche
		General	Supplement	Basic	Supplement	
2010 KLE650CAF	99976-1515(EN/FR/DE) 99976-1516(IT/ES/NL) 99986-1527(English)	99931-1516-01		99924-1435-01		99912-1658-01

PARTS LIST INFORMATION

This parts catalog lists parts and sub-assemblies provided as spare parts.
When it becomes necessary to replace parts always use KAWASAKI GENUINE PARTS. Strict inspection assures quality and performance of KAWASAKI GENUINE PARTS.

1. HOW TO ODER PARTS

When ordering parts be sure to use the catalog for the correct model and year of the vehicle. Include the following items exactly as listed in this catalog on your parts order.

Part Number
Part Name
Color Code
Specify the color using both color code (which is part of the part number) and name when ordering painted parts.
Example: 51001-5074-H8 TANK-COMP-FUEL,EBONY

Parts not shown disassembled in the illustrations of this parts catalog are not sold separately; only the complete units or next higher assemblies illustrated, are supplied, as spare parts.

2. EXPLANATION OF PARTS CATALOG FORMAT

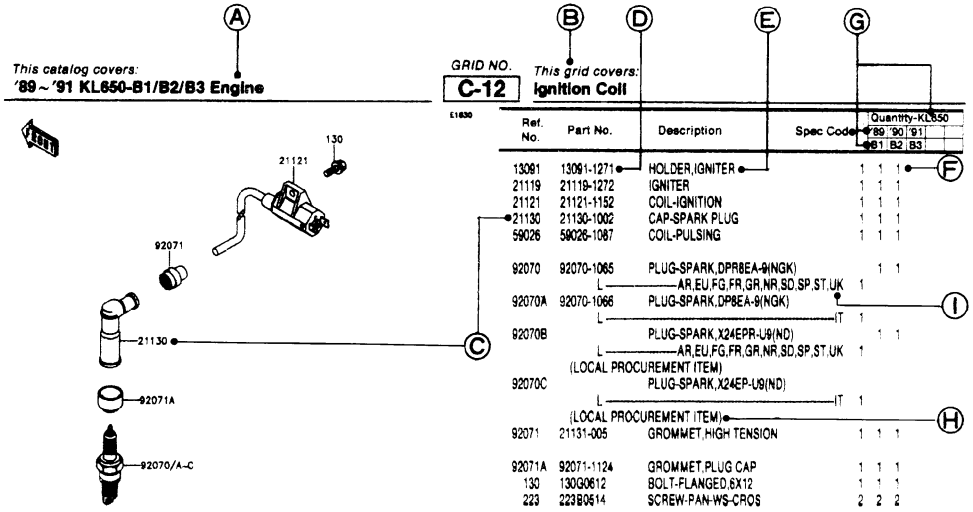

A. Year & Model Title
This title describes the year(s) and model(s) contained in this catalog.

B. Part Group Title
A representative name for the group of parts illustrated on this page.

C. Referernce Number
The reference number is listed on the illustration and parts list. It is the link between the illustration and the parts list.

D. Part Number
The number assigned to a part for the purpose of parts ordering.

1) Part Number (New Structure)
00000 – 0000 – 00 or 00000 – 0000 – 000
Color Code
Production Number
Function Code

(Old Structure)
00000 – 000 – 00

2) Standard Hardware Number
000 0 0000
Size Number
Material or Surface Treatment Code (Alphabet)
Item Number

E. Description
Describes the main function of the part and includes data such as size, number of teeth, color,etc.

List of Abbreviations

(+)	Plus	HEX	Hexagonal	REF	Reference
(-)	Minus	ID =	Inside Diameter	RH	Right Hand
&	And	KPH	Killometers Per Hour	RPM	Revolutions Per Minute
2ND	Second	L	Link	RR	Rear
3RD	Third	L =	Length	STD	Standard
4TH	Fourth	L/	Less	T	Teeth
AR	As Required	LH	Left Hand	T =	Thickness
ASSY	Assembly	LWR	Lower	U/S	Under Size
CA	Cut Away	MM	Millimeter	UPP	Upper
CNT	Center	MPH	Miles Per Hour	V	Volt
COMP	Complete	NA	Not Available	W	Watt
D	Degree	O/S	Over Size	W/	With
FR	Front	OD =	Outside Diameter	WD	With Decal
G	Gram	PR	Ply Rating	WOD	Without Decal

F. Quantity
Specifies how many of a part are required at the indicated position on the illustration.

G. Year & Model
Indicates which parts are used for a specific vehicle year and model.

H. Additional Information
Additional Information is shown as follows:
1) (OPTION) Part is not installed as original equipment, but is available separately.
2) (RACING USE ONLY) Part is to be used for closed course racing only on this vehicle.
3) (OFF-ROAD USE ONLY) Part is for off-road use only this vehicle.
4) (LOCAL PROCUREMENT ITEM) Part is obtainable from a local source. No part number is listed.
5) Technical relationships between old part numbers and new part numbers are shown as follows:
INTERCHANGE - Old part or new part can be used.
SUBSTITUTE - New part replaces old part. Old part cannot be used in place of new part.
6) Mid-Year part number changes on a vehicle are noted by engine or frame number references.

(- KZ400DE001181)	Affected units are from beginning of model year production up to and including this engine number.
(KZ400D-008111 -)	Affected units are from this frame number to the end of model year production.
(KZ400DE008181 - KZ400DE018888)	Affected units are in this engine number range.

I. Specification Code
Identifies the specification of the vehicle for which the part applies. If no spec code is listed, that means the part is used for all specifications.

Spec Code	Specification	’10				
		CAF				
UK	United Kingdom	O				
WV	Whole Vehicle Type Approval	O				

KLE650CAF

Left Side View

Right Side View

’10 KLE650CAF

O : Applicable ×: Not applicable

Color: Metallic Spark Black (660) **(1)**

Part No.	Description	Spec.Code UK	WV											
14092-0073-27E	COVER,HEAD LAMP,M.SILVER	O	O											
14092-0074-458	COVER,RADIATOR,LH,P.SILVER	O	O											
14092-0075-458	COVER,RADIATOR,RH,P.SILVER	O	O											
14092-0158-458	COVER,PIVOT,LH,P.SILVER	O	O											
14092-0159-458	COVER,PIVOT,RH,P.SILVER	O	O											
32160-0435-26M	FRAME-COMP,F.M.GRAY	O	O											
33001-0209-458	ARM-COMP-SWING,P.SILVER	O	O											
35004-0137-660	FENDER-FRONT,M.S.BLACK	O	O											
35063-0310-458	STAY,STEP,FR,LH,P.SILVER	O	O											
35063-0401-458	STAY,STEP,FR,RH,P.SILVER	O	O											
35063-0478-26M	STAY,STEP,RR,LH,F.M.GRAY	O	O											
35063-0479-26M	STAY,STEP,RR,RH,F.M.GRAY	O	O											
36040-0096-660	COVER-TAIL,LH,M.S.BLACK	O	O											
36040-0097-660	COVER-TAIL,RH,M.S.BLACK	O	O											
41073-0051-R2	WHEEL-ASSY,RR,BLACK	O	O											
41073-0053-R2	WHEEL-ASSY,FR,BLACK	O	O											
41080-0177-11I	DISC,FR,HOUSING BLK+DISC SIL	O	O											
43080-0076-DJ	CALIPER-SUB-ASSY,FR,LH,BLACK	O	O											
43080-0077-DJ	CALIPER-SUB-ASSY,FR,RH,BLACK	O	O											
43080-0085-DJ	CALIPER-SUB-ASSY,RR,BLACK	O	O											
44008-0037-499	PIPE-FORK OUTER,A.BLACK	O	O											
44013-0156-18R	PIPE-FORK INNER,LH,F.S.BLACK	O	O											
44013-0157-18R	PIPE-FORK INNER,RH,F.S.BLACK	O	O											
44039-0064-458	HOLDER-FORK UPPER,P.SILVER	O	O											
45014-0147-458	SHOCKABSORBER,P.SILVER	O	O											
46003-0167-10T	HANDLE,F.P.SILVER	O	O											
46012-0029-458	HOLDER-HANDLE,UPP,P.SILVER	O	O											
46012-0030-458	HOLDER-HANDLE,LWR,P.SILVER	O	O											
49107-0081-6Z	COVER-EXHAUST PIPE,LH,F.BLACK	O	O											
49107-0082-6Z	COVER-EXHAUST PIPE,RH,F.BLACK	O	O											

’10 KLE650CAF

O : Applicable ×: Not applicable

Color: Metallic Spark Black (660) **(2)**

Part No.	Description	Spec.Code											
		UK	WV										
51001-0332-739	TANK-COMP-FUEL,M.F.S.BLACK	O	O										
53003-0112-MA	LEATHER,SEAT,BLACK	O	O										
53066-0296-MA	SEAT-ASSY,DUAL,BLACK	O	O										
55028-0354-660	COWLING,SIDE,LH,M.S.BLACK	O	O										
55028-0355-660	COWLING,SIDE,RH,M.S.BLACK	O	O										

’10 KLE650CAF

O : Applicable ×: Not applicable

Color: Pearl Solar Yellow (10A) **(1)**

Part No.	Description	Spec.Code UK	WV											
14092-0073-27E	COVER,HEAD LAMP,M.SILVER	O	O											
14092-0074-458	COVER,RADIATOR,LH,P.SILVER	O	O											
14092-0075-458	COVER,RADIATOR,RH,P.SILVER	O	O											
14092-0158-458	COVER,PIVOT,LH,P.SILVER	O	O											
14092-0159-458	COVER,PIVOT,RH,P.SILVER	O	O											
32160-0435-26M	FRAME-COMP,F.M.GRAY	O	O											
33001-0209-458	ARM-COMP-SWING,P.SILVER	O	O											
35004-0137-10A	FENDER-FRONT,P.S.YELLOW	O	O											
35063-0310-458	STAY,STEP,FR,LH,P.SILVER	O	O											
35063-0401-458	STAY,STEP,FR,RH,P.SILVER	O	O											
35063-0478-26M	STAY,STEP,RR,LH,F.M.GRAY	O	O											
35063-0479-26M	STAY,STEP,RR,RH,F.M.GRAY	O	O											
36040-0096-10A	COVER-TAIL,LH,P.S.YELLOW	O	O											
36040-0097-10A	COVER-TAIL,RH,P.S.YELLOW	O	O											
41073-0051-R2	WHEEL-ASSY,RR,BLACK	O	O											
41073-0053-R2	WHEEL-ASSY,FR,BLACK	O	O											
41080-0177-11I	DISC,FR,HOUSING BLK+DISC SIL	O	O											
43080-0076-DJ	CALIPER-SUB-ASSY,FR,LH,BLACK	O	O											
43080-0077-DJ	CALIPER-SUB-ASSY,FR,RH,BLACK	O	O											
43080-0085-DJ	CALIPER-SUB-ASSY,RR,BLACK	O	O											
44008-0037-499	PIPE-FORK OUTER,A.BLACK	O	O											
44013-0156-18R	PIPE-FORK INNER,LH,F.S.BLACK	O	O											
44013-0157-18R	PIPE-FORK INNER,RH,F.S.BLACK	O	O											
44039-0064-458	HOLDER-FORK UPPER,P.SILVER	O	O											
45014-0147-458	SHOCKABSORBER,P.SILVER	O	O											
46003-0167-10T	HANDLE,F.P.SILVER	O	O											
46012-0029-458	HOLDER-HANDLE,UPP,P.SILVER	O	O											
46012-0030-458	HOLDER-HANDLE,LWR,P.SILVER	O	O											
49107-0081-6Z	COVER-EXHAUST PIPE,LH,F.BLACK	O	O											
49107-0082-6Z	COVER-EXHAUST PIPE,RH,F.BLACK	O	O											

’10 KLE650CAF

O : Applicable ×: Not applicable

Color: Pearl Solar Yellow (10A) (2)

Part No.	Description	Spec.Code												
		UK	WV											
51001-0332-739	TANK-COMP-FUEL,M.F.S.BLACK	O	O											
53003-0112-MA	LEATHER,SEAT,BLACK	O	O											
53066-0296-MA	SEAT-ASSY,DUAL,BLACK	O	O											
55028-0354-10A	COWLING,SIDE,LH,P.S.YELLOW	O	O											
55028-0355-10A	COWLING,SIDE,RH,P.S.YELLOW	O	O											

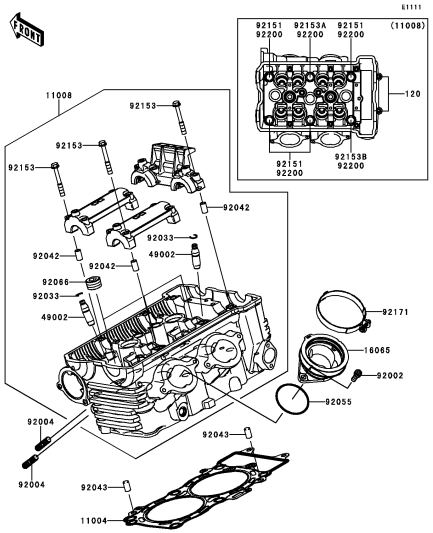

B-3 **Cylinder Head**

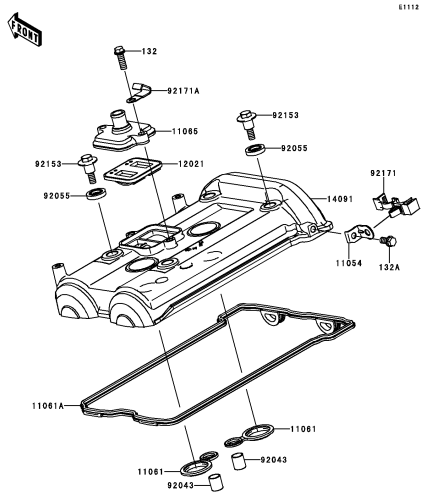

B-4 **Cylinder Head Cover**

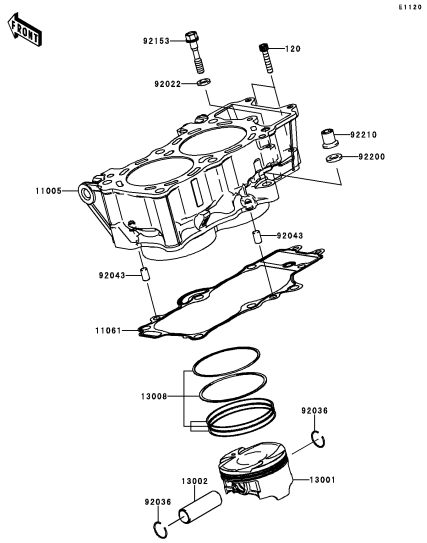

B-5 **Cylinder/Piston(s)**

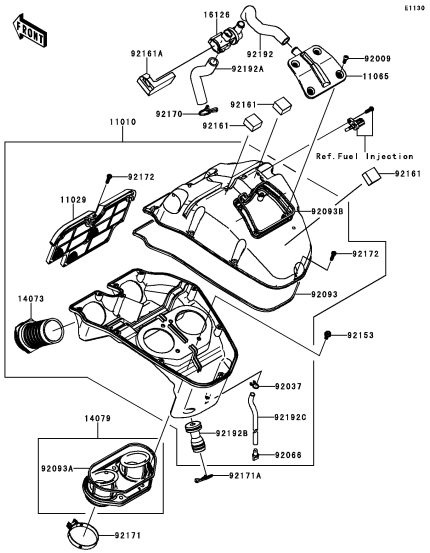

B-6 **Air Cleaner**

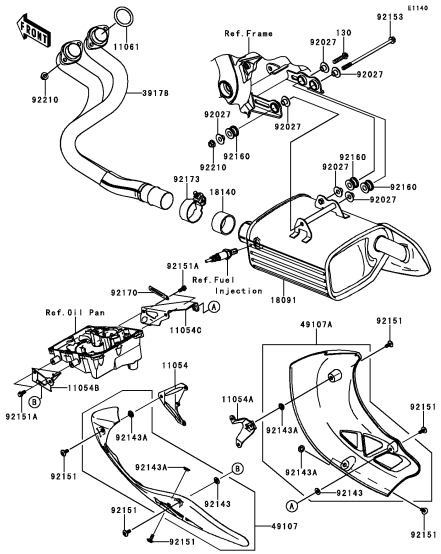

B-7 **Muffler(s)**

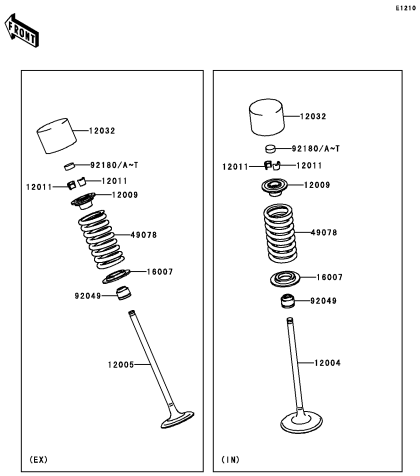

B-8 **Valve(s)**

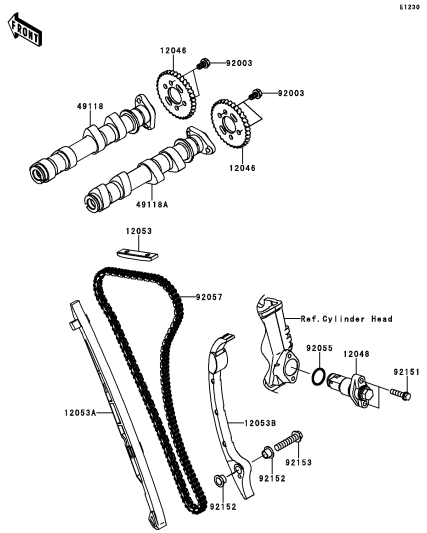

B-9 **Camshaft(s)/Tensioner**

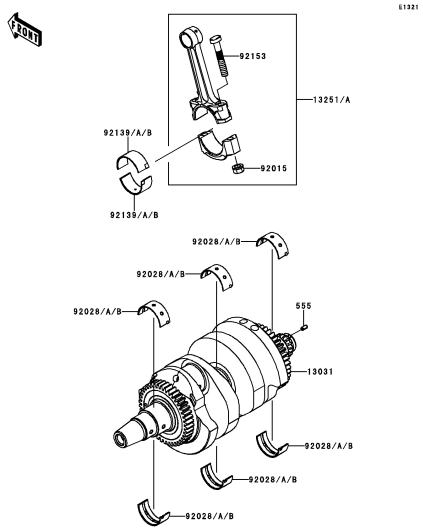

B-10 **Crankshaft**

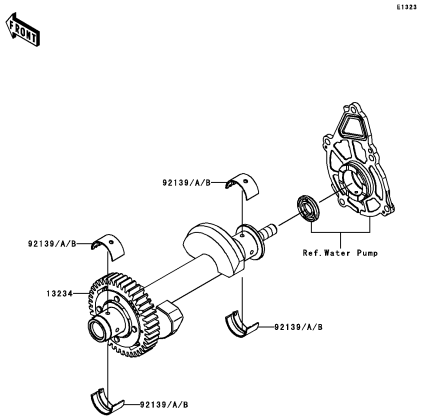

B-11 **Balancer**

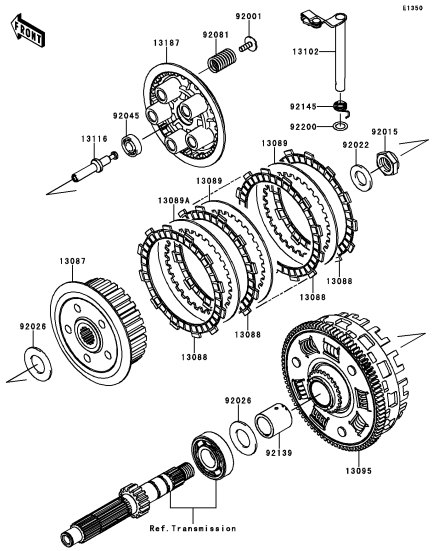

B-12 **Clutch**

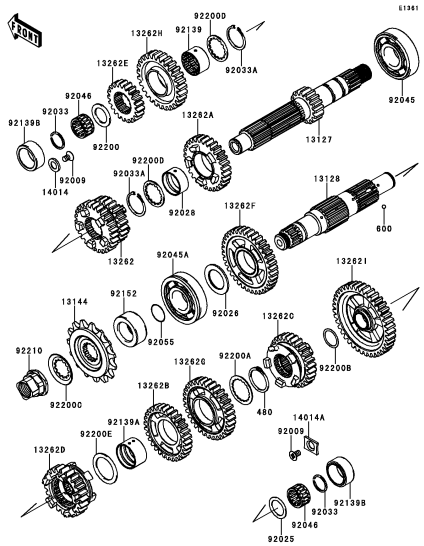

B-13 **Transmission**

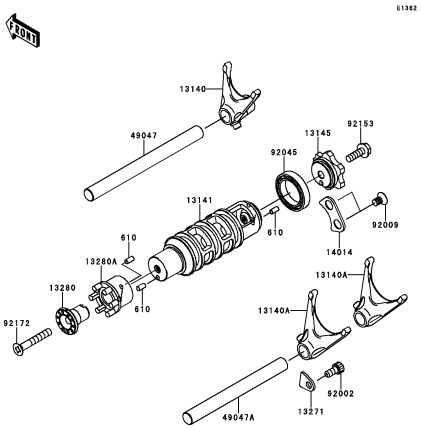

B-14 **Gear Change Drum/Shift Fork(s)**

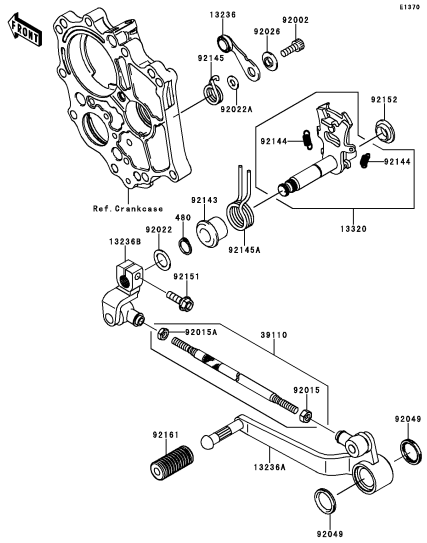

C-3 **Gear Change Mechanism**

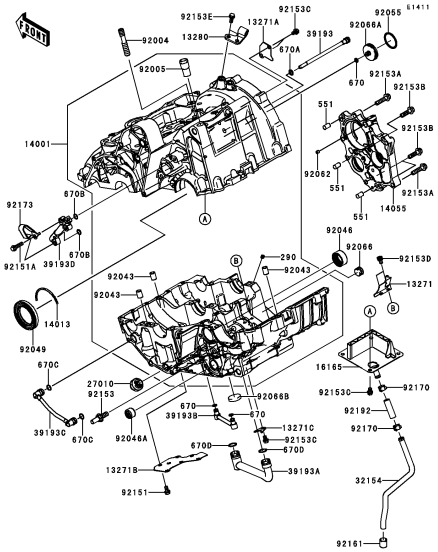

C-4 **Crankcase(1/2)**

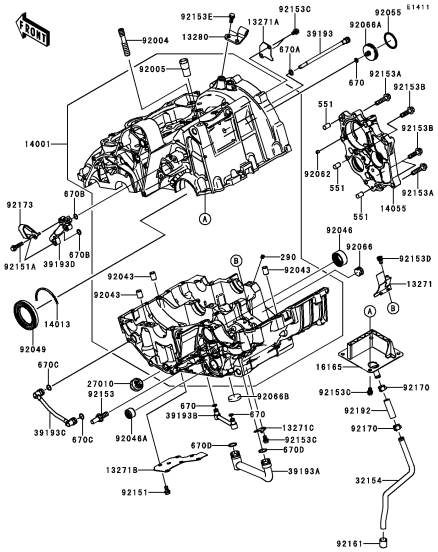

C-5 **Crankcase(2/2)**

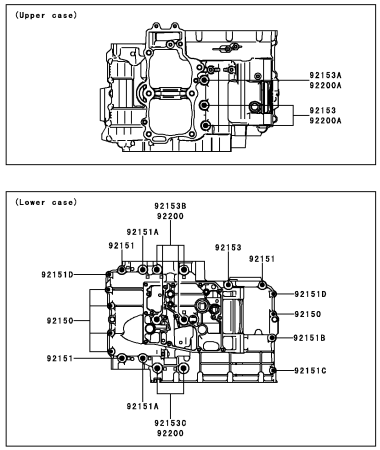

C-6 **Crankcase Bolt Pattern**

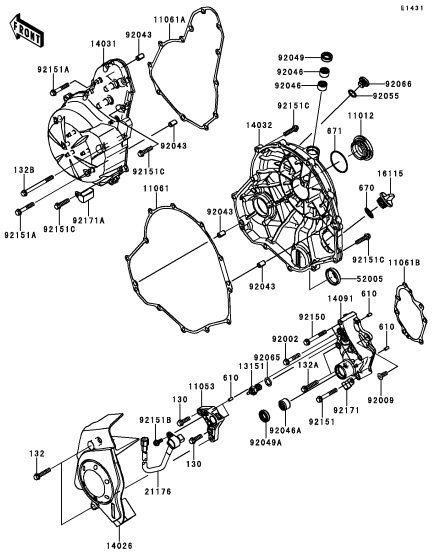

C-7 **Engine Cover(s)**

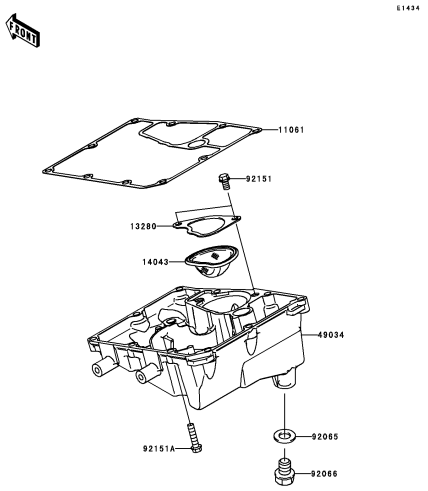

C-8 **Oil Pan**

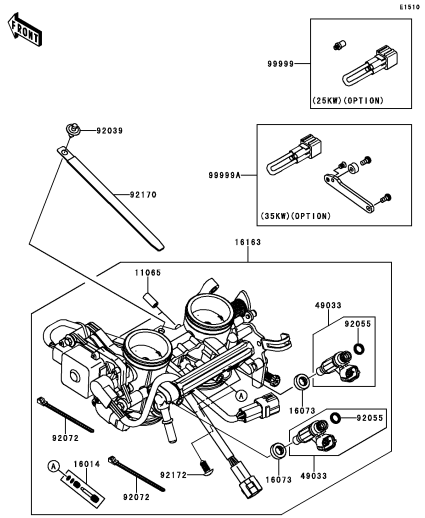

C-9 **Throttle**

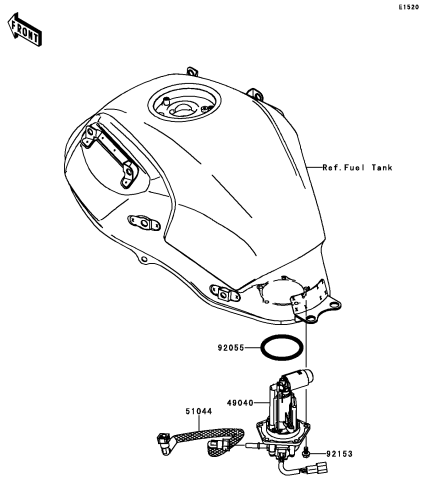

C-10 **Fuel Pump**

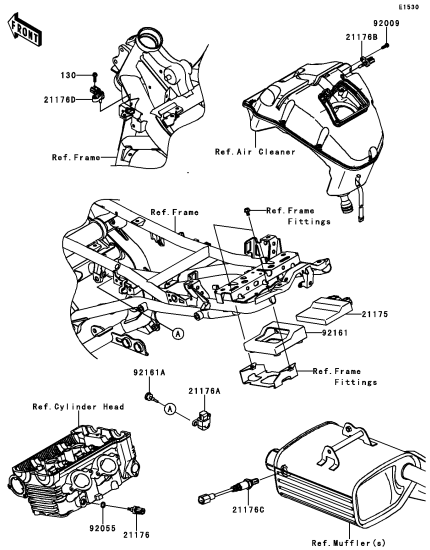

C-11 **Fuel Injection**

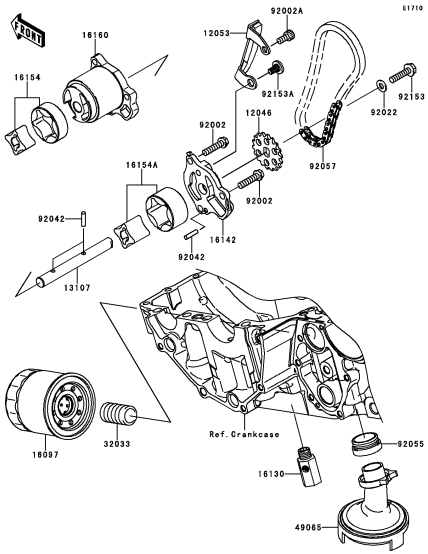

C-12 **Oil Pump**

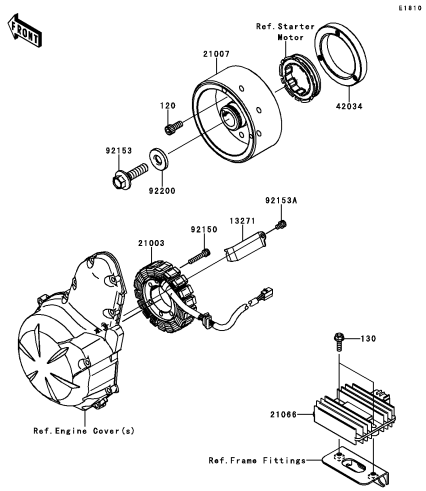

C-13 **Generator**

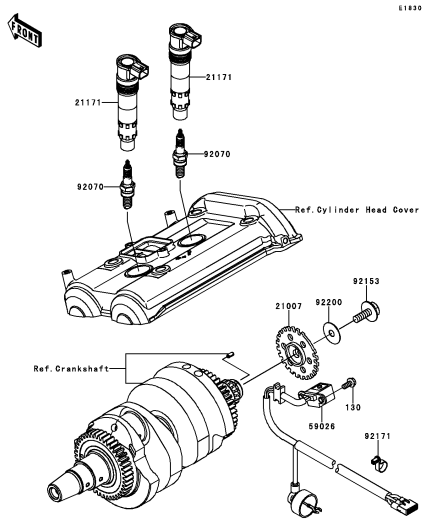

C-14 **Ignition System**

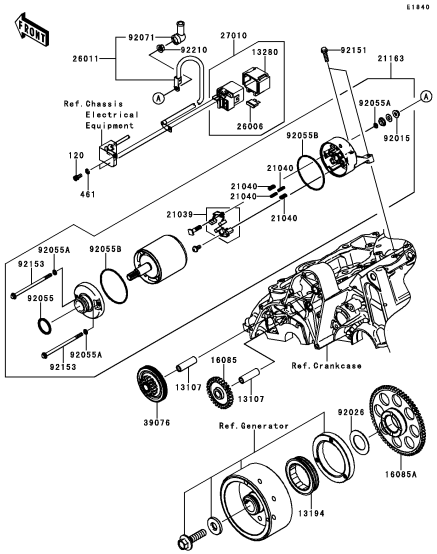

D-3 **Starter Motor**

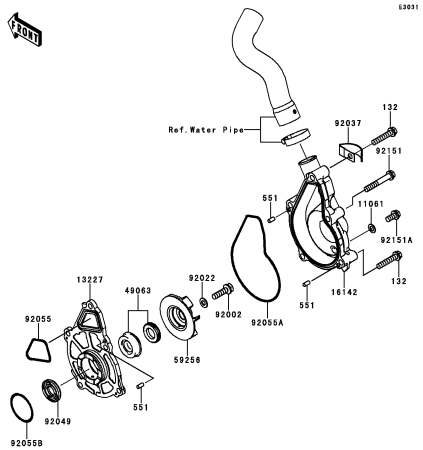

D-4 **Water Pump**

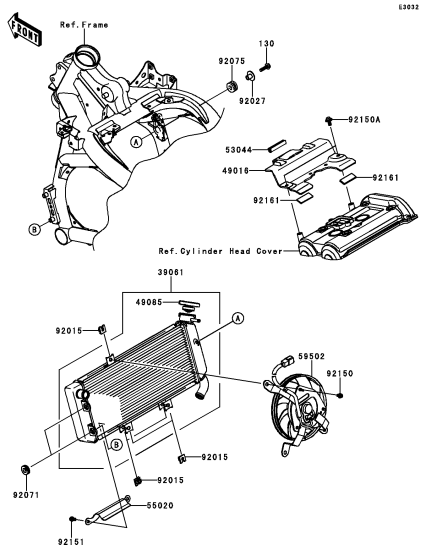

D-5 **Radiator**

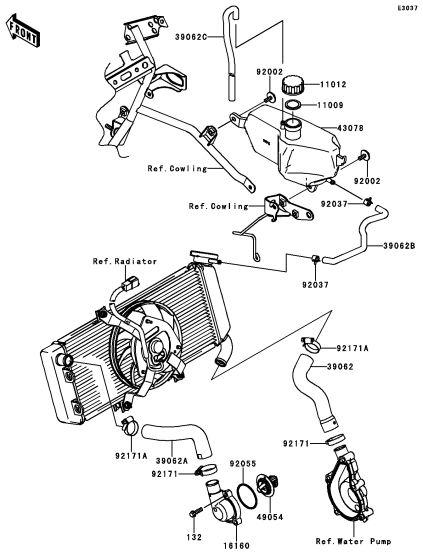

D-6 **Water Pipe**

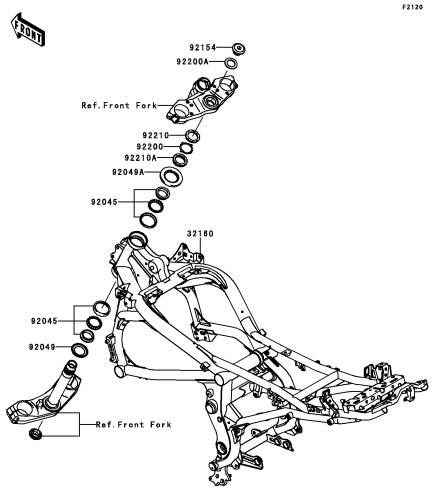

E-3 **Frame**

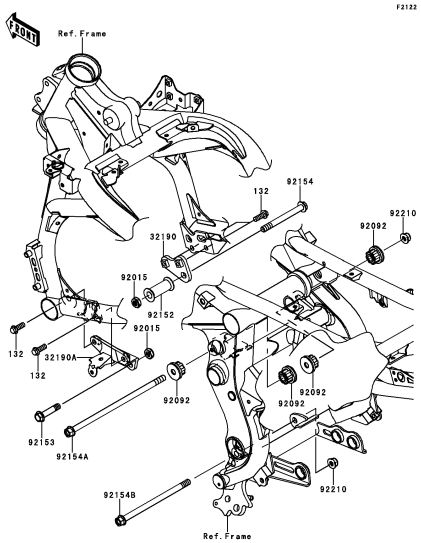

E-4 **Engine Mount**

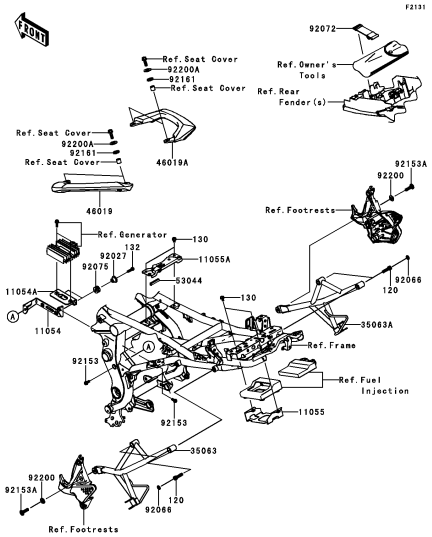

E-5 **Frame Fittings**

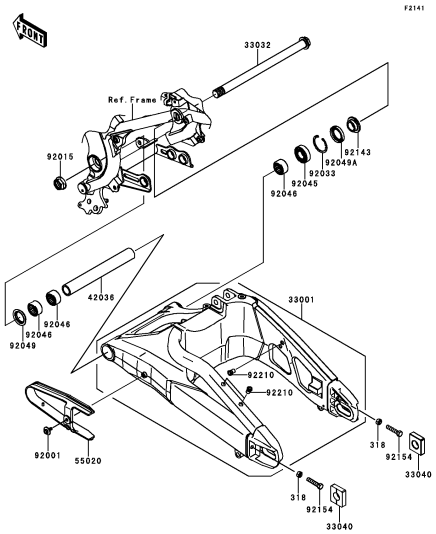

E-6 **Swingarm**

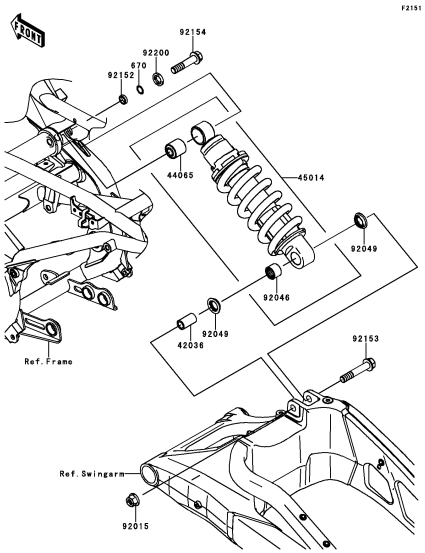

E-7 **Suspension/Shock Absorber**

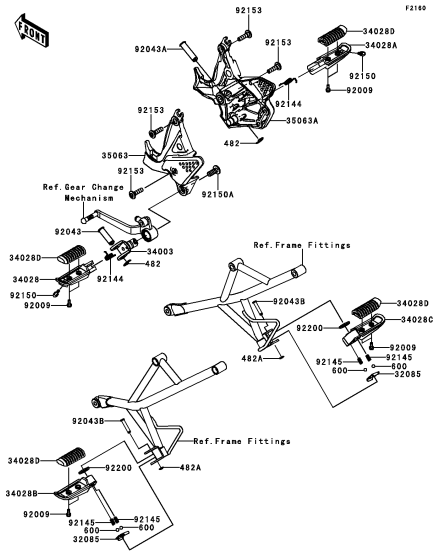

E-8 **Footrests**

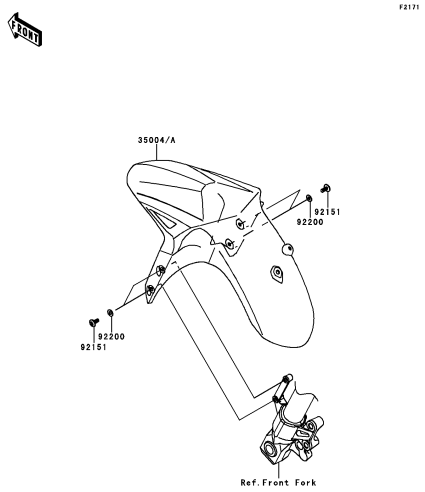

E-9 **Front Fender(s)**

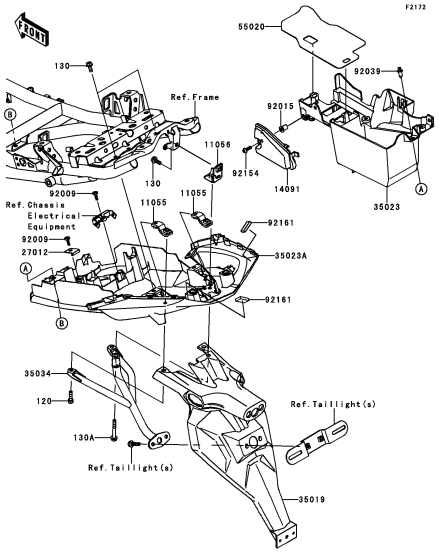

E-10 **Rear Fender(s)**

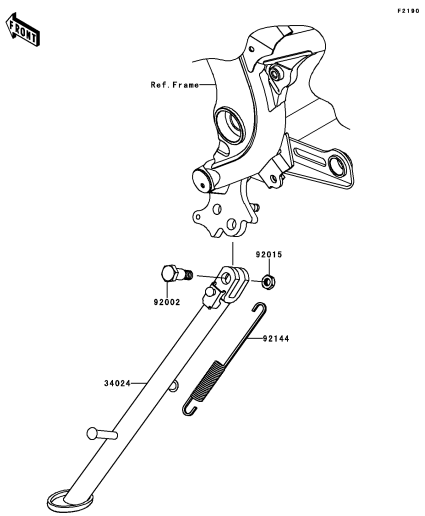

E-11 **Stand(s)**

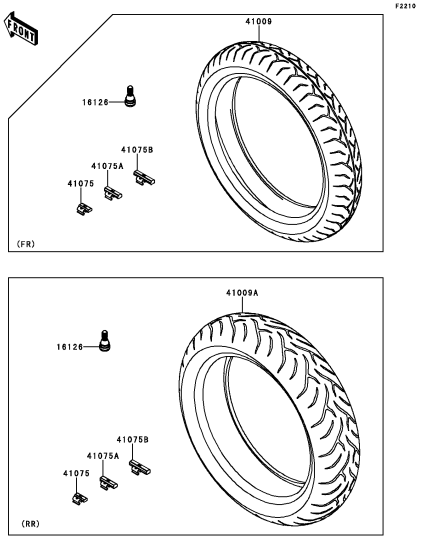

E-12 **Tires**

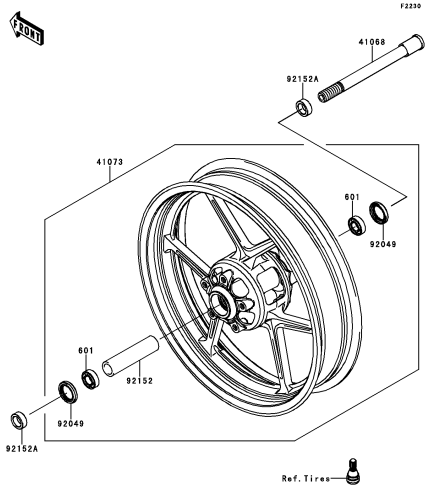

E-13 **Front Hub**

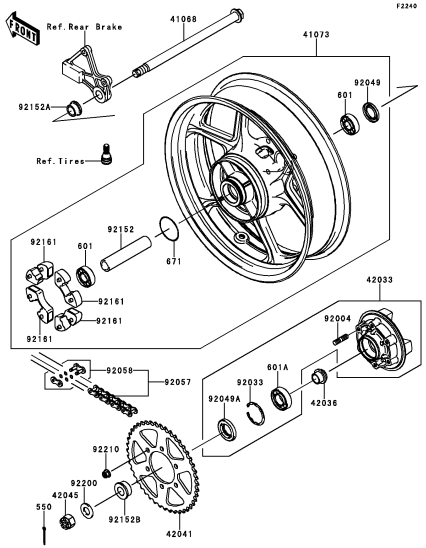

E-14 **Rear Hub**

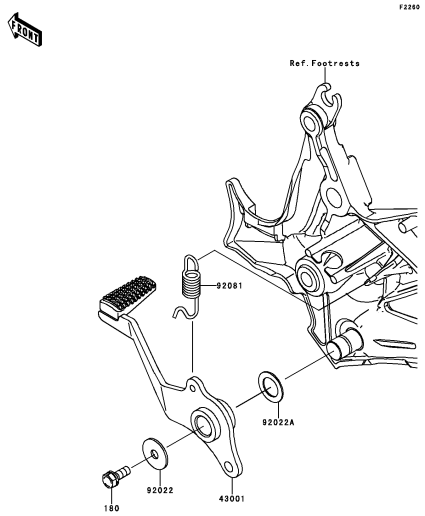

F-3 **Brake Pedal**

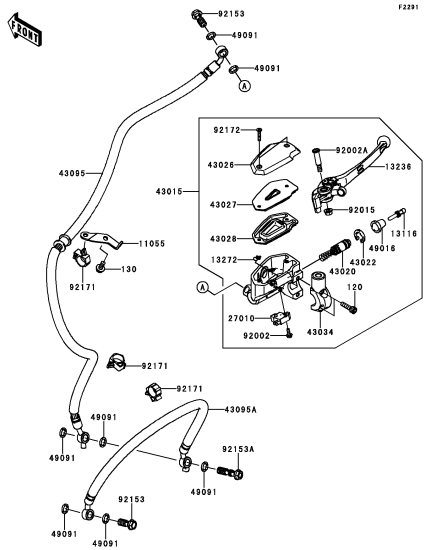

F-4 **Front Master Cylinder**

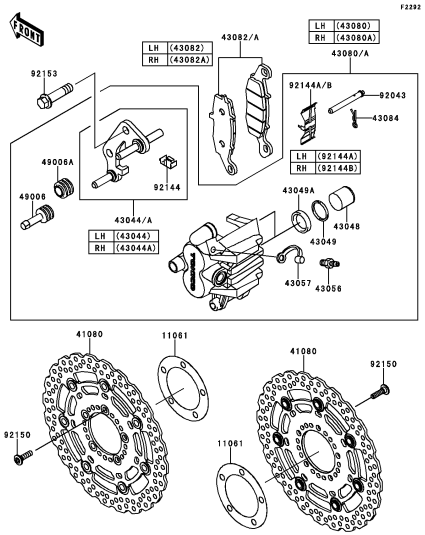

F-5 **Front Brake**

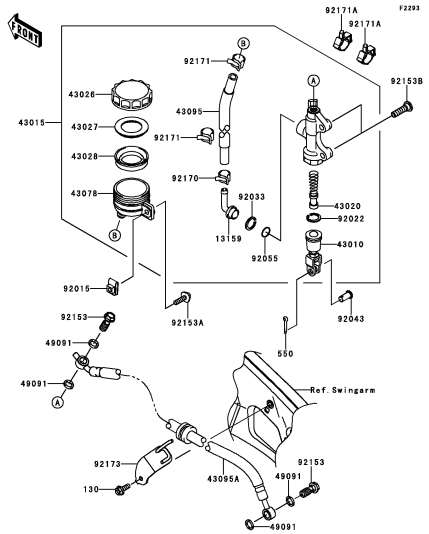

F-6 **Rear Master Cylinder**

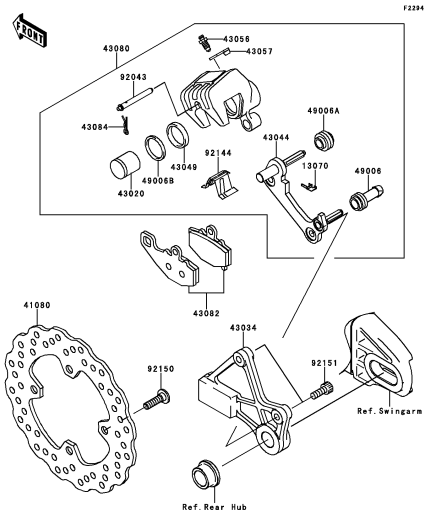

F-7 **Rear Brake**

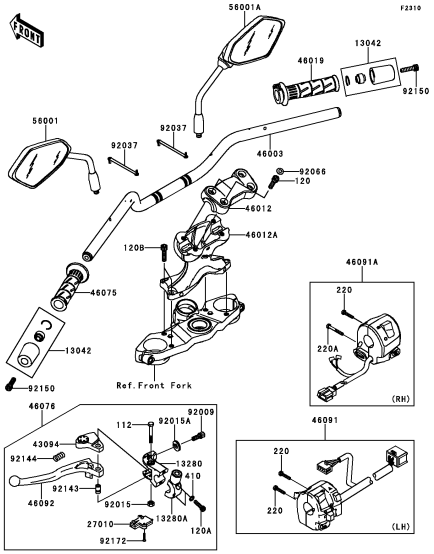

F-8 **Handlebar**

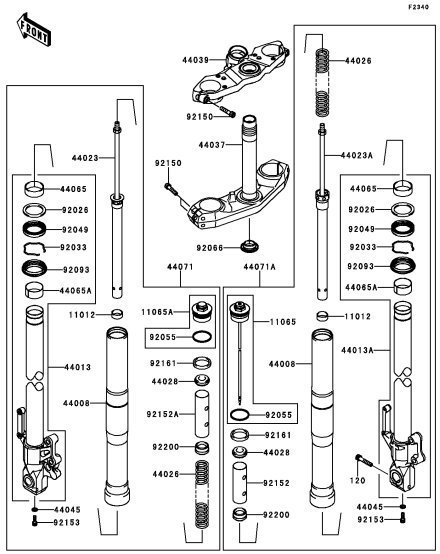

F-9 **Front Fork**

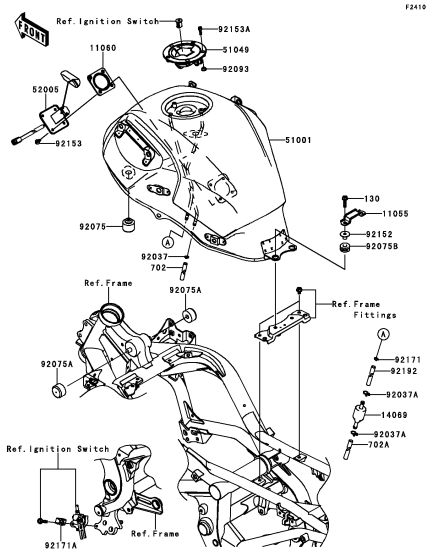

F-10 **Fuel Tank**

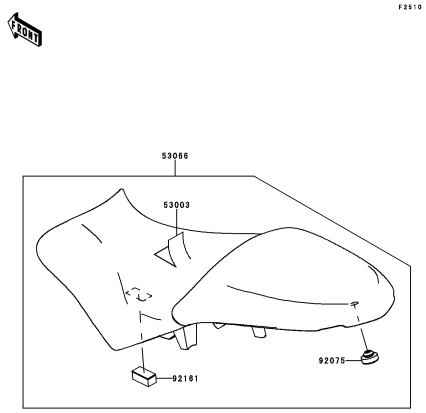

F-11 **Seat**

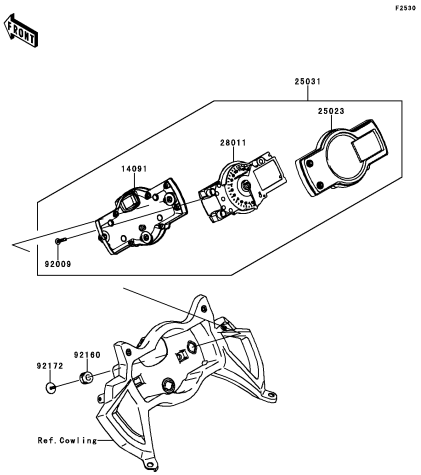

F-12 **Meter(s)**

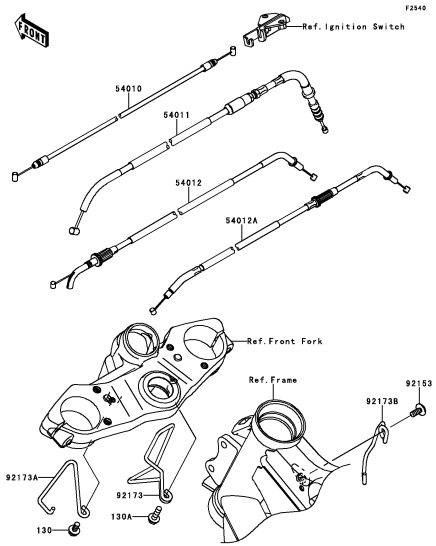

F-13 **Cables**

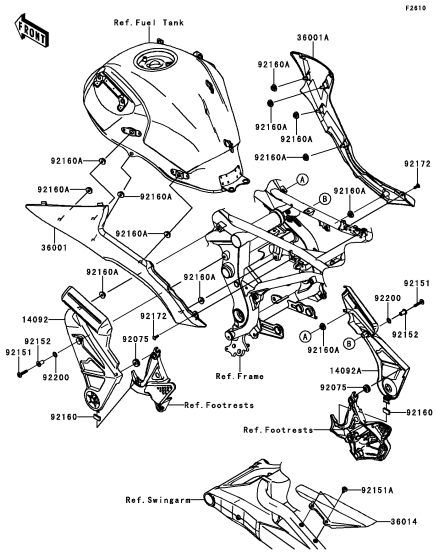

F-14 **Side Covers/Chain Cover**

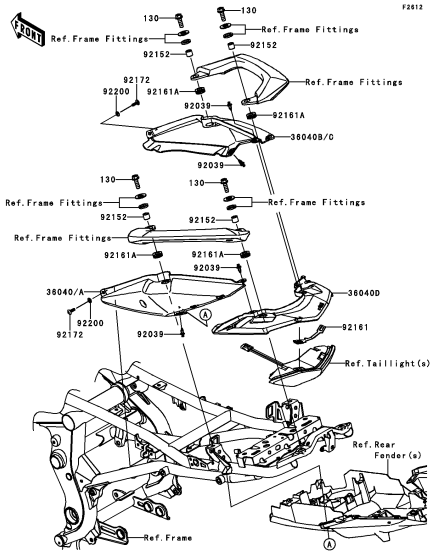

G-3 **Seat Cover**

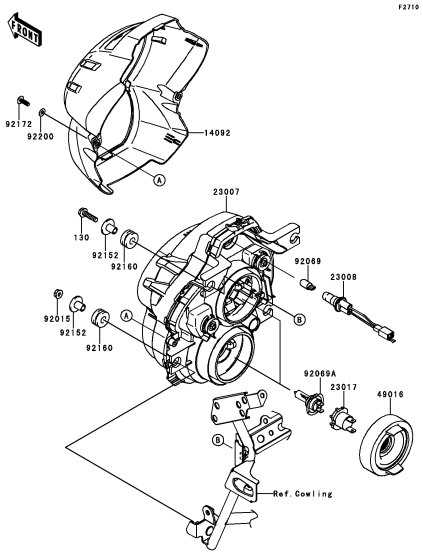

G-4 **Headlight(s)**

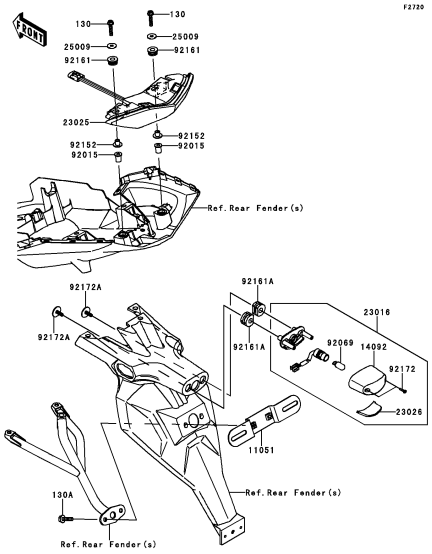

G-5 **Taillight(s)**

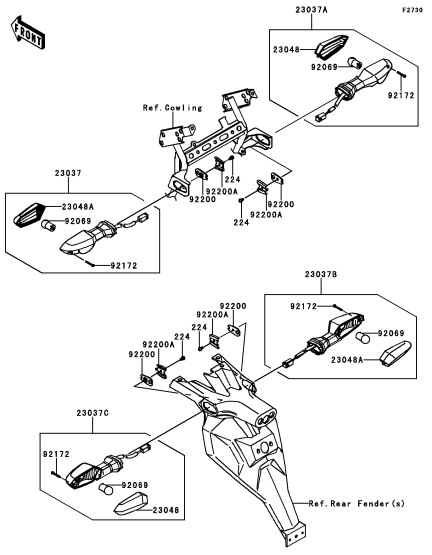

G-6 **Turn Signals**

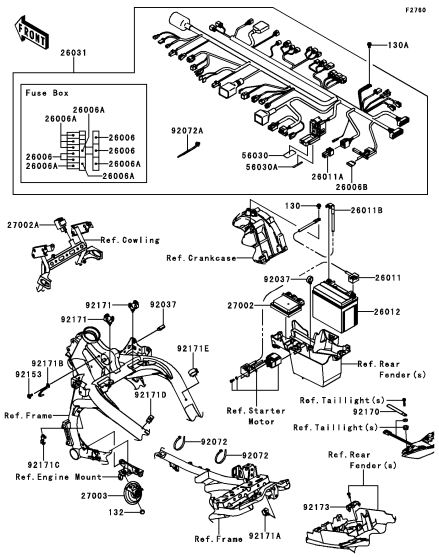

G-7 **Chassis Electrical Equipment**

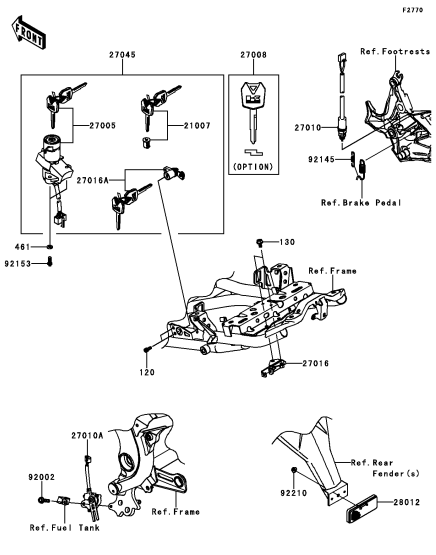

G-8 **Ignition Switch**

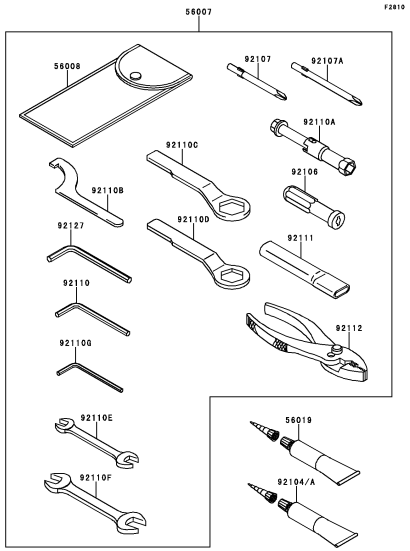

G-9 **Owner’s Tools**

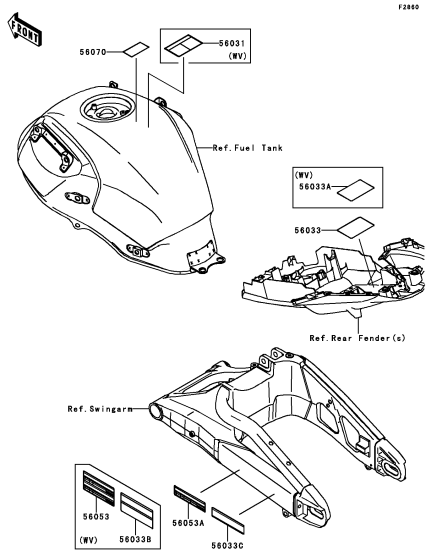

G-10 **Labels**

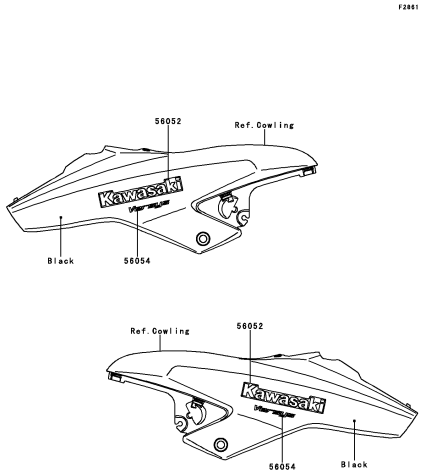

G-11 **Decals(Black)**

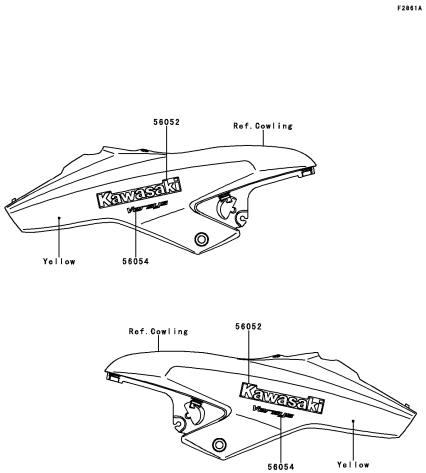

G-12 **Decals(Yellow)**

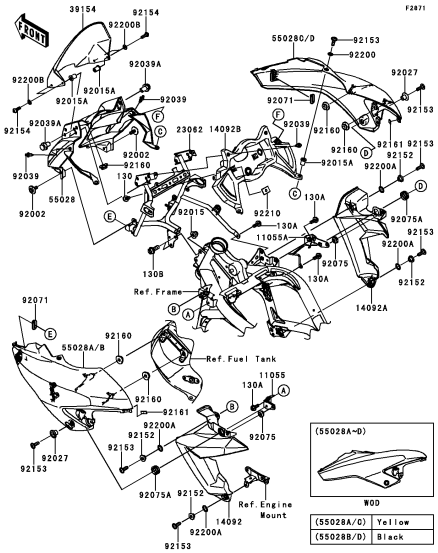

G-13 **Cowling**

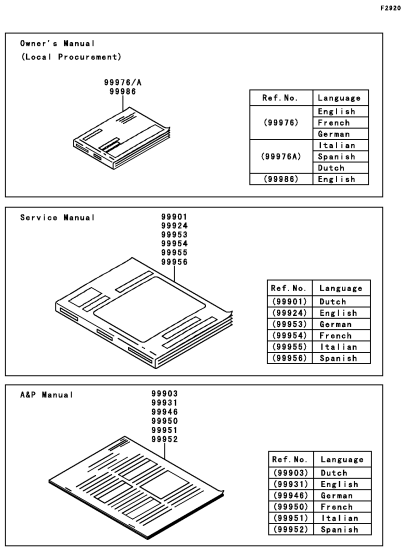

G-14 **Manual**

This catalog covers:

’10 KLE650CAF Engine

GRID NO.

B-3

This grid covers:

Cylinder Head

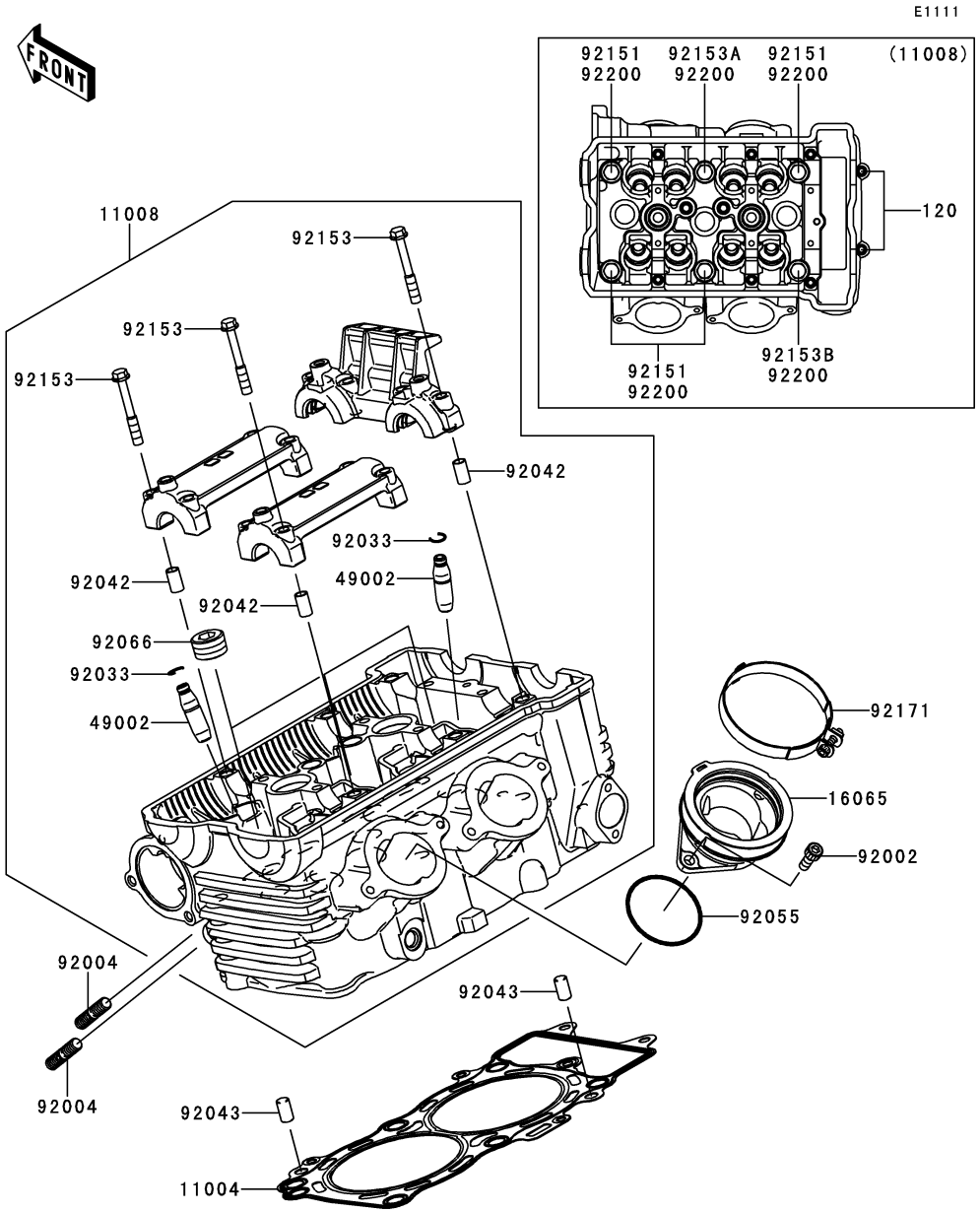

Ref. No.	Part No.	Description	Spec Code	Quantity-KLE650 ’10				
				CAF				
11004	11004-0064	GASKET-HEAD		1				
11008	11008-0107	HEAD-COMP-CYLINDER		1				
16065	16065-0024	HOLDER,THROTTLE BODY		2				
49002	49002-1116	GUIDE-VALVE		AR				
92002	92002-1143	BOLT,6X16		4				
92004	92004-0025	STUD,8X22		4				
92033	92033-1247	RING-SNAP		8				
92042	92042-007	PIN,DOWEL,6.3X8X14		6				
92043	92043-1567	PIN,8X14		2				
92055	92055-1600	RING-O,47X1.9		2				
92066	92066-0002	PLUG,PT1/2X12.5		3				
92151	92151-1152	BOLT,10X158		4				
92153	92153-0339	BOLT,6X45		12				
92153A	92153-0972	BOLT,FLANGED-SMALL,10X176		1				
92153B	92153-1321	BOLT,FLANGED-SMALL,10X80		1				
92171	92171-1089	CLAMP		2				
92200	92200-0363	WASHER,10.5X19X2.3		6				
120	120CD0630	BOLT-SOCKET,6X30		2				

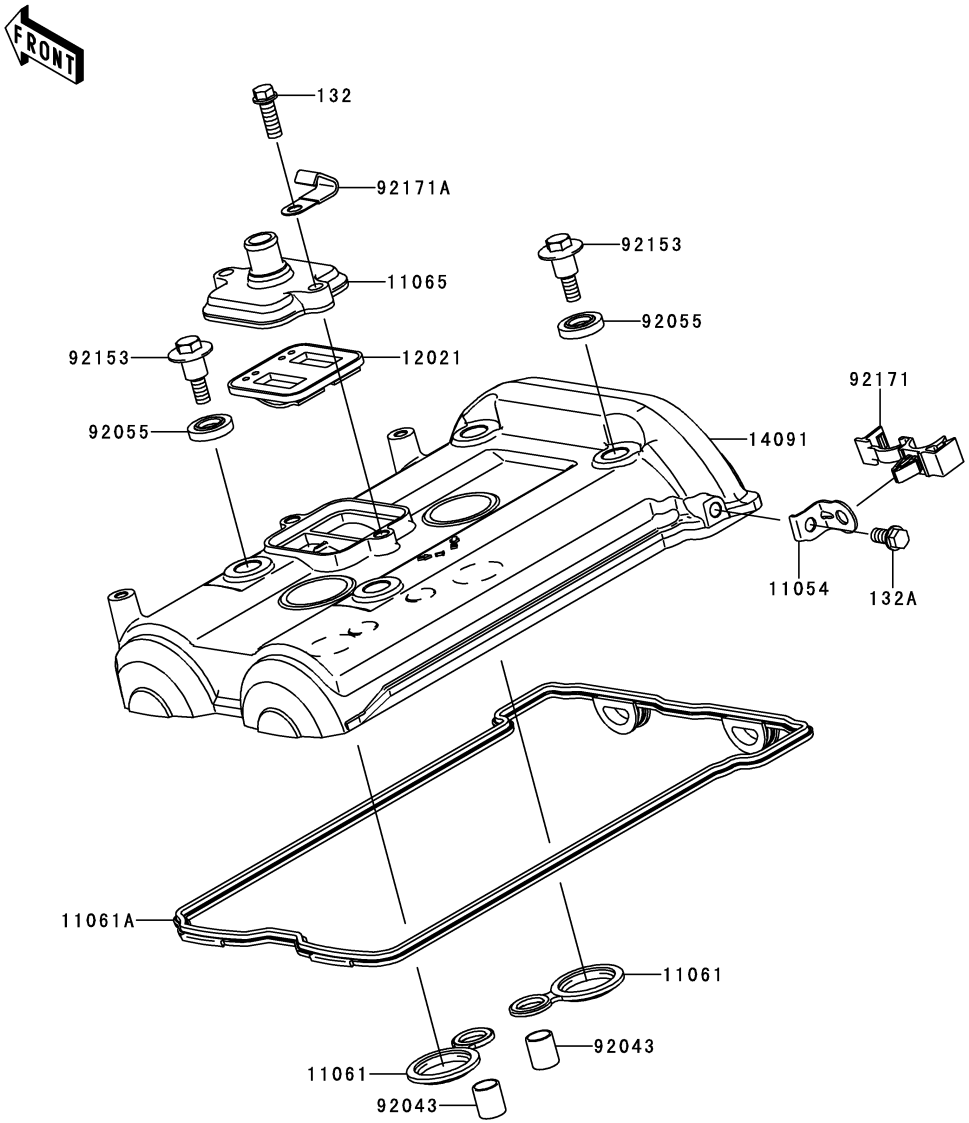

E1112

Ref. No.	Part No.	Description	Spec Code	Quantity-KLE650 ’10 CAF				
11054	11054-0869	BRACKET		1				
11061	11061-0105	GASKET,SPARK PLUG HOLE		2				
11061A	11061-0170	GASKET,HEAD COVER		1				
11065	11065-0208	CAP		1				
12021	12021-1130	VALVE-ASSY-REED		1				
14091	14091-0719	COVER,HEAD		1				
92043	92043-4009	PIN,10.1X12X14		2				
92055	92055-1352	RING-O,HEAD COVER BOLT		4				
92153	92153-0793	BOLT,HEAD COVER		4				
92171	92171-0789	CLAMP,BRAKE HOSE		1				
92171A	92171-0813	CLAMP		1				
132	132BA0618	BOLT-FLANGED-SMALL,6X18		2				
132A	132BB0612	BOLT-FLANGED-SMALL,6X12		1				

GRID NO. **B-5**

This grid covers:
Cylinder/Piston(s)

E1120

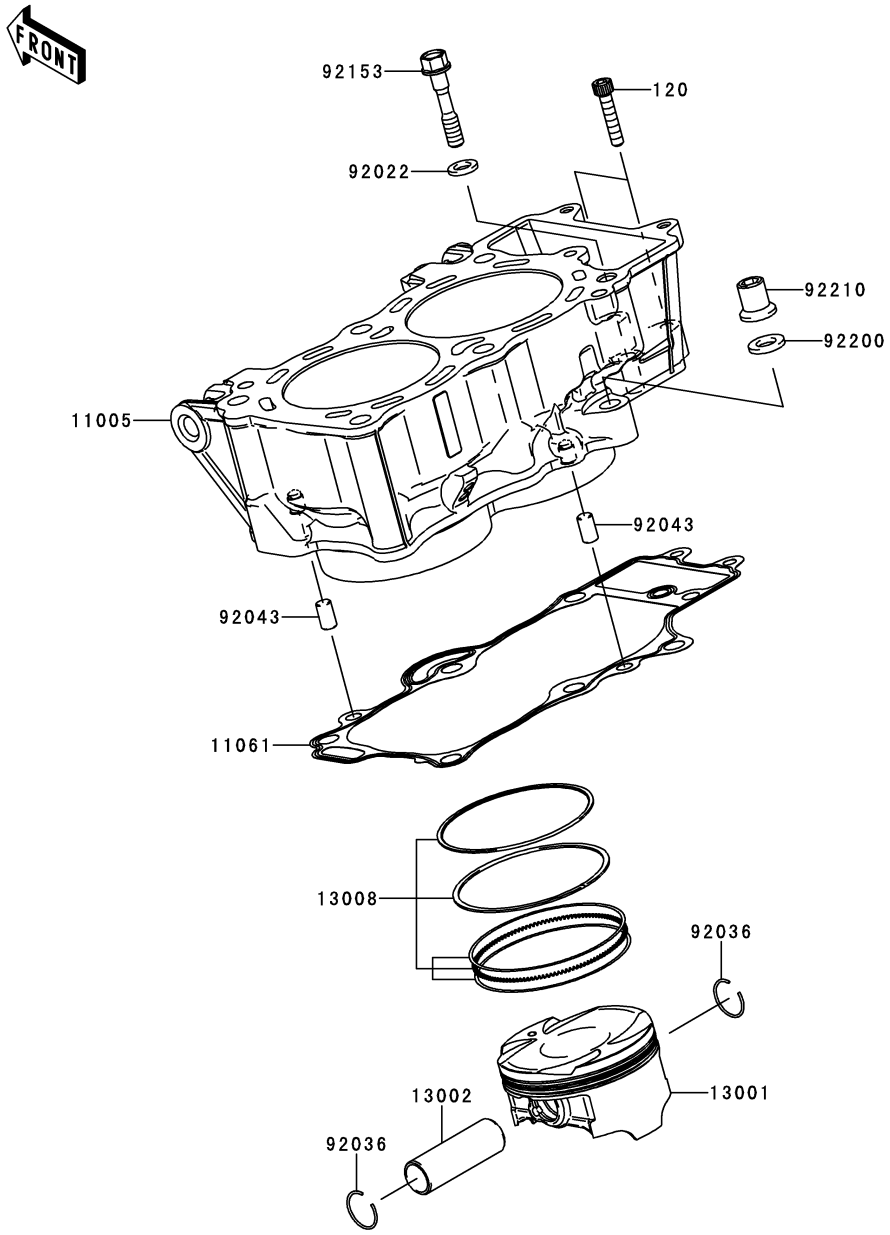

Ref. No.	Part No.	Description	Spec Code	Quantity-KLE650 '10 CAF
11005	11005-0082	CYLINDER-ENGINE		1
11061	11061-0171	GASKET,CYLINDER BASE		1
13001	13001-0087	PISTON-ENGINE		2
13002	13002-0007	PIN-PISTON		2
13008	13008-1196	RING-SET-PISTON		2
92022	92022-1401	WASHER,9X15.5X2		1
92036	92036-008	RING-SNAP,PISTON PIN		4
92043	92043-1567	PIN,8X14		2
92153	92153-1011	BOLT,8X43		1
92200	92200-0363	WASHER,10.5X19X2.3		1
92210	92210-0223	NUT		1
120	120CD0630	BOLT-SOCKET,6X30		2

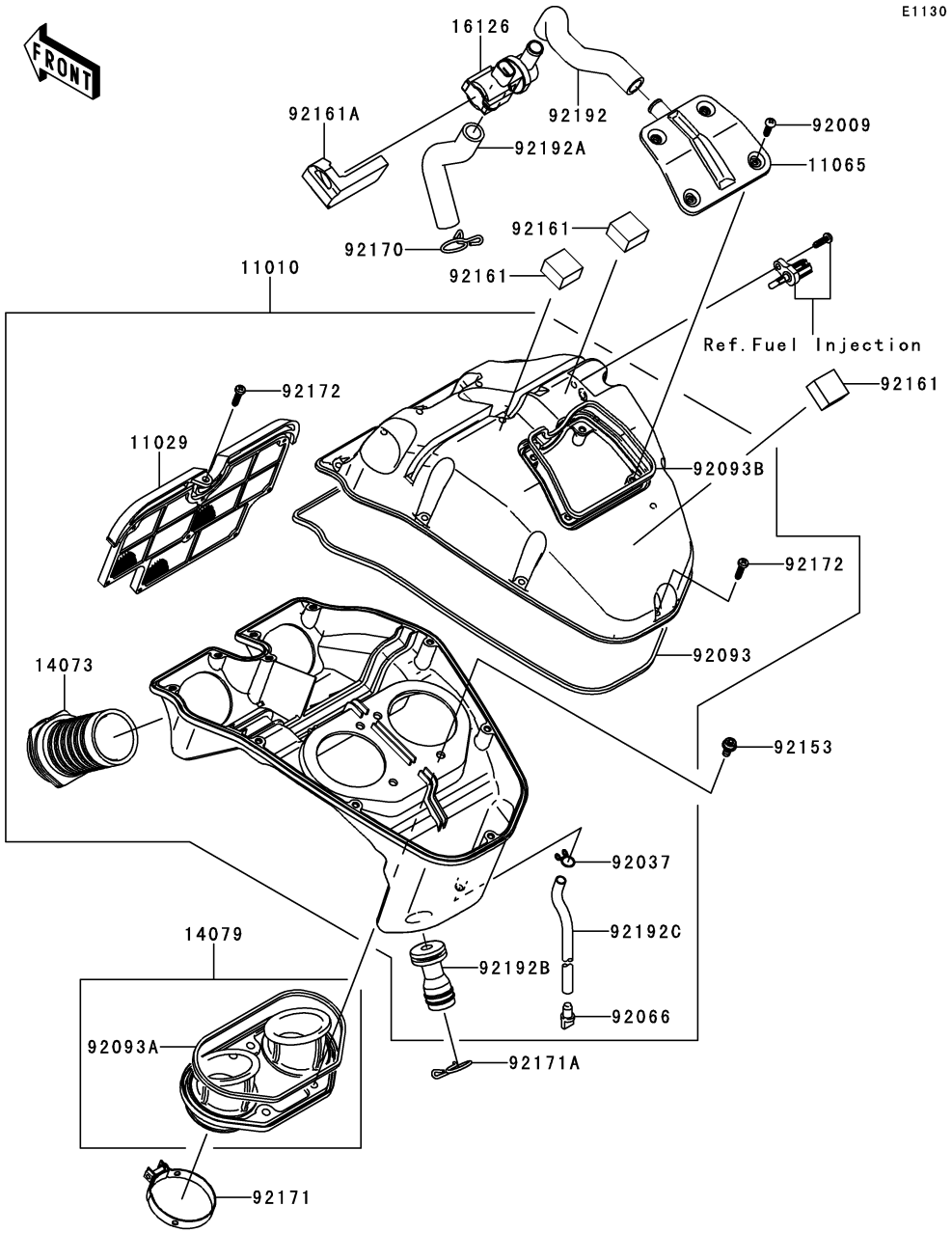

Ref. No.	Part No.	Description	Spec Code	Quantity-KLE650 '10	CAF
11010	11010-0153	FILTER-ASSY-AIR		1	
11029	11029-0008	ELEMENT-ASSY-AIR FILTER		1	
11065	11065-0120	CAP,UPPER CASE		1	
14073	14073-0110	DUCT		2	
14079	14079-0017	HOLDER-ASSY		1	
16126	16126-0019	VALVE,AIR SWITING		1	
92009	92009-1984	SCREW,TAPPING,5X16		4	
92037	92037-147	CLAMP,TUBE		1	
92066	92066-1211	PLUG,DRAIN		1	
92093	92093-0045	SEAL,L=1080		1	
92093A	92093-0046	SEAL		1	
92093B	92093-0048	SEAL,L=368		1	
92153	92153-0759	BOLT,SOCKET,6X12		4	
92161	92161-0302	DAMPER,T=15		3	
92161A	92161-0309	DAMPER		1	
92170	92170-1017	CLAMP		1	
92171	92171-0314	CLAMP		2	
92171A	92171-0435	CLAMP		1	
92172	92172-0009	SCREW,TAPPING,5X20		11	
92192	92192-0231	TUBE,ASV-A/C		1	
92192A	92192-0232	TUBE,HEAD-ASV		1	
92192B	92192-0264	TUBE,BREATHER		1	
92192C	92192-0325	TUBE,DRAIN,6X9X280		1	

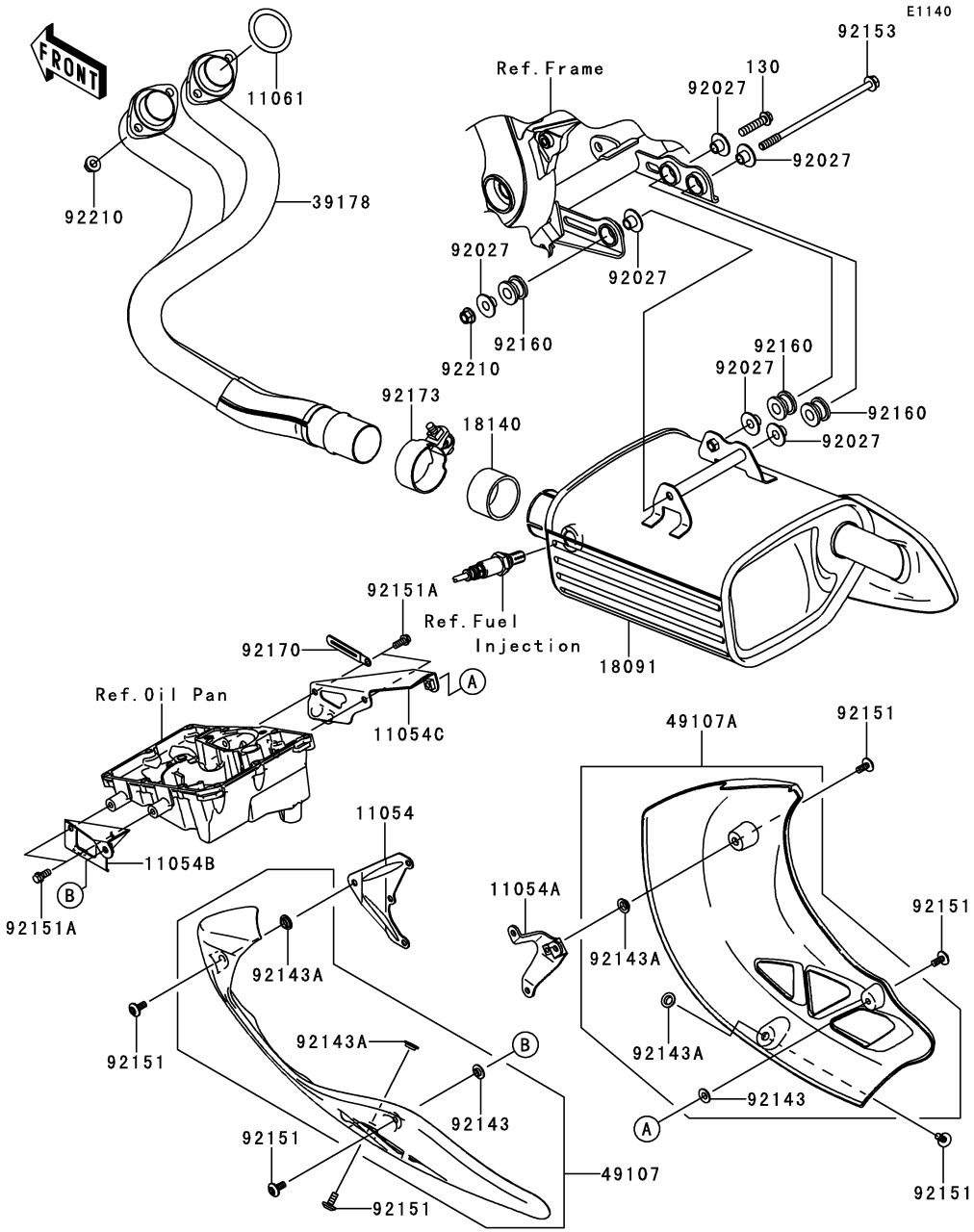

Ref. No.	Part No.	Description	Spec Code	Quantity-KLE650 ’10 CAF				
11054	11054-0420	BRACKET,EX.COVER,UPP,LH		1				
11054A	11054-0421	BRACKET,EX.COVER,UPP,RH		1				
11054B	11054-0485	BRACKET,EX.COVER,LWR,LH		1				
11054C	11054-0486	BRACKET,EX.COVER,LWR,RH		1				
11061	11061-0278	GASKET,EXHAUST PIPE		2				
18091	18091-0642	BODY-COMP-MUFFLER		1				
18140	18140-0002	GASKET-MUFFLER		1				
39178	39178-0062	MANIFOLD-COMP-EXHAUST		1				
49107	49107-0081-6Z	COVER-EXHAUST PIPE,LH,F.BLACK		1				
49107A	49107-0082-6Z	COVER-EXHAUST PIPE,RH,F.BLACK		1				
92027	92027-1653	COLLAR,FLANGED,8.8X10.6		6				
92143	92143-1087	COLLAR		2				
92143A	92143-1196	COLLAR		4				
92151	92151-1654	BOLT,SOCKET,6X14		6				
92151A	92151-1755	BOLT,FLANGED,6X14		4				
92153	92153-1357	BOLT,FLANGED,8X165		1				
92160	92160-1116	DAMPER,MUFFLER MOUNT		3				
92170	92170-1514	CLAMP		1				
92173	92173-0110	CLAMP		1				
92210	92210-1114	NUT,8MM		5				
130	130CD0835	BOLT-FLANGED,8X35		1				

E1210

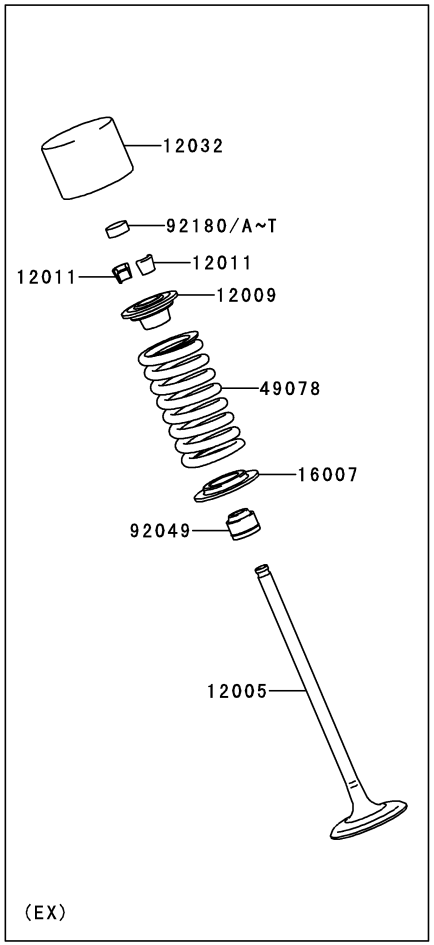

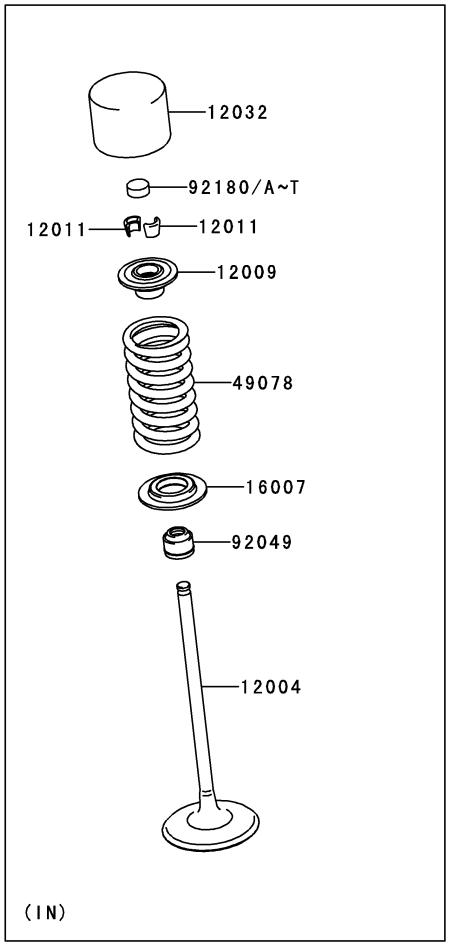

Ref. No.	Part No.	Description	Spec Code	Quantity-KLE650 '10 CAF
12004	12004-0015	VALVE-INTAKE		4
12005	12005-0035	VALVE-EXHAUST		4
12009	12009-1091	RETAINER-VALVE SPRING		8
12011	12011-1053	COLLET		16
12032	12032-0009	TAPPET		8
16007	16007-1228	SEAT-SPRING		8
49078	49078-0038	SPRING-ENGINE VALVE		8
92049	92049-1349	SEAL-OIL,VSB 4.3 7.5 5.3 8.3		8
92180	92180-1014	SHIM,T=2.50		AR
92180A	92180-1016	SHIM,T=2.55		AR
92180B	92180-1018	SHIM,T=2.60		AR
92180C	92180-1020	SHIM,T=2.65		AR
92180D	92180-1022	SHIM,T=2.70		AR
92180E	92180-1024	SHIM,T=2.75		AR
92180F	92180-1026	SHIM,T=2.80		AR
92180G	92180-1028	SHIM,T=2.85		AR
92180H	92180-1030	SHIM,T=2.90		AR
92180I	92180-1032	SHIM,T=2.95		AR
92180J	92180-1034	SHIM,T=3.00		8
92180K	92180-1036	SHIM,T=3.05		AR
92180L	92180-1038	SHIM,T=3.10		AR
92180M	92180-1040	SHIM,T=3.15		AR
92180N	92180-1042	SHIM,T=3.20		AR
92180O	92180-1044	SHIM,T=3.25		AR
92180P	92180-1046	SHIM,T=3.30		AR
92180Q	92180-1048	SHIM,T=3.35		AR
92180R	92180-1050	SHIM,T=3.40		AR
92180S	92180-1052	SHIM,T=3.45		AR
92180T	92180-1054	SHIM,T=3.50		AR

E1230

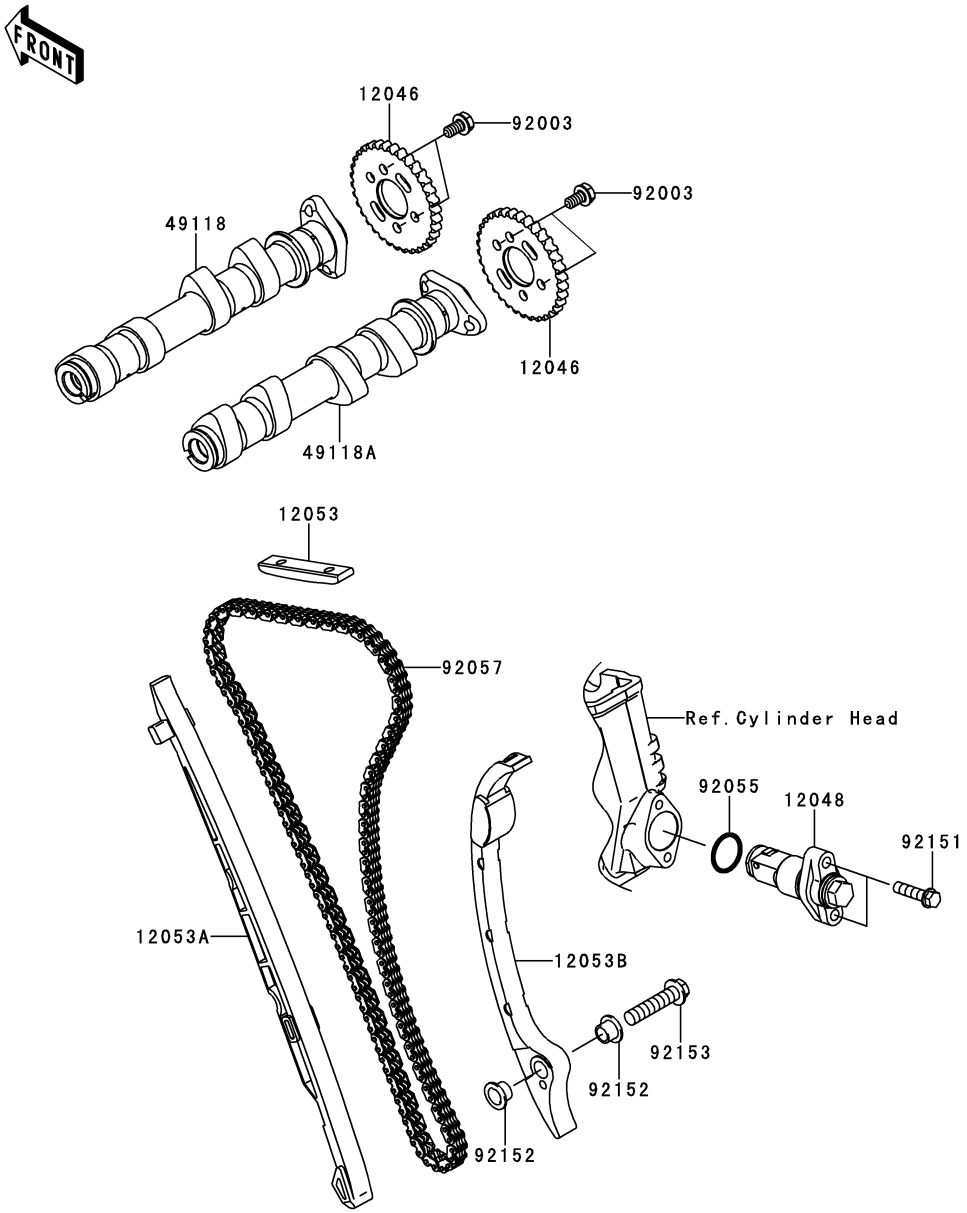

Ref. No.	Part No.	Description	Spec Code	Quantity-KLE650 ’10 CAF				
12046	12046-0041	SPROCKET,CAM,24T		2				
12048	12048-0038	TENSIONER-ASSY		1				
12053	12053-0051	GUIDE-CHAIN,UPP		1				
12053A	12053-0059	GUIDE-CHAIN,FR		1				
12053B	12053-0075	GUIDE-CHAIN,RR		1				
49118	49118-0075	CAMSHAFT-COMP,EX		1				
49118A	49118-0076	CAMSHAFT-COMP,IN		1				
92003	92003-208	BOLT,FLANGED,6X11		4				
92055	92055-086	RING-O,18.8X1.9		1				
92057	92057-0100	CHAIN,CAM,92RH 2015-134M		1				
92151	92151-1930	BOLT,FLANGED-SMALL,6X25		2				
92152	92152-0306	COLLAR,8.2X10.6X6.9		2				
92153	92153-1394	BOLT,FLANGED-SMALL,8X35		1				

E1321

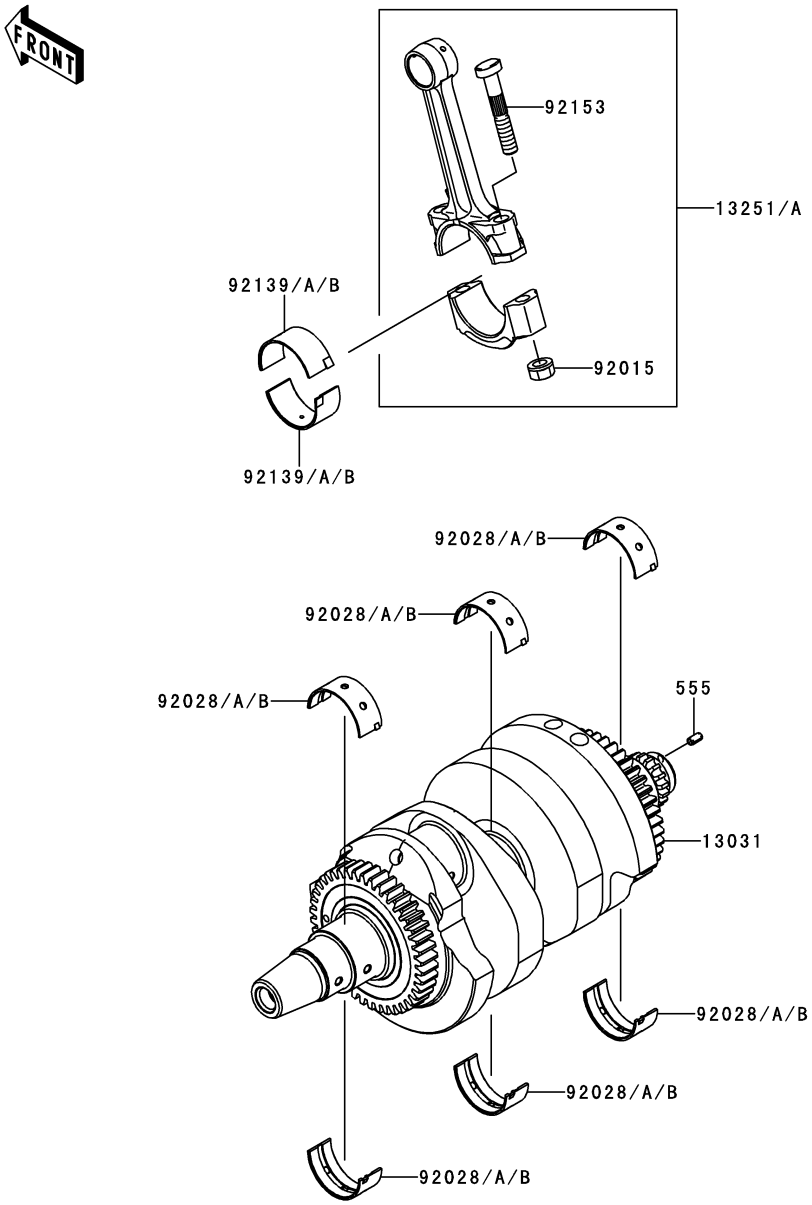

Ref. No.	Part No.	Description	Spec Code	Quantity-KLE650 '10 CAF				
13031	13031-0097	CRANKSHAFT-COMP		1				
13251	13251-0010-JJ	ROD-ASSY-CONNECTING,J		AR				
13251A	13251-0010-KK	ROD-ASSY-CONNECTING,K		2				
92015	92015-1311	NUT,FLANGED,8MM		4				
92028	92028-1903	BUSHING,CRANKSHAFT,BLUE		6				
92028A	92028-1904	BUSHING,CRANKSHAFT,BLACK		AR				
92028B	92028-1905	BUSHING,CRANKSHAFT,BROWN		AR				
92139	92139-0114	BUSHING,CON-ROD,BLUE		4				
92139A	92139-0115	BUSHING,CON-ROD,BLACK		AR				
92139B	92139-0116	BUSHING,CON-ROD,BROWN		AR				
92153	92153-0957	BOLT,CON-ROD,8X49		4				
555	555A0408	PIN-SPRING,4X8		1				

E1323

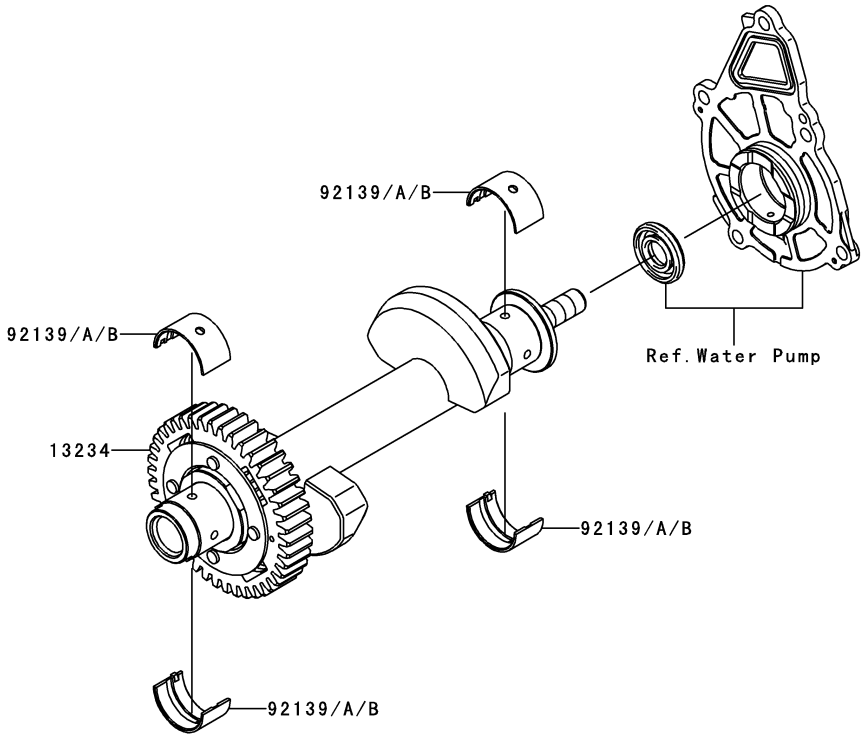

Ref. No.	Part No.	Description	Spec Code	Quantity-KLE650				
				’10				
				CAF				
13234	13234-0042	SHAFT-COMP,BALANCER		1				
92139	92139-0117	BUSHING,BALANCER,BLUE		4				
92139A	92139-0118	BUSHING,BALANCER,BLACK		AR				
92139B	92139-0119	BUSHING,BALANCER,BROWN		AR				

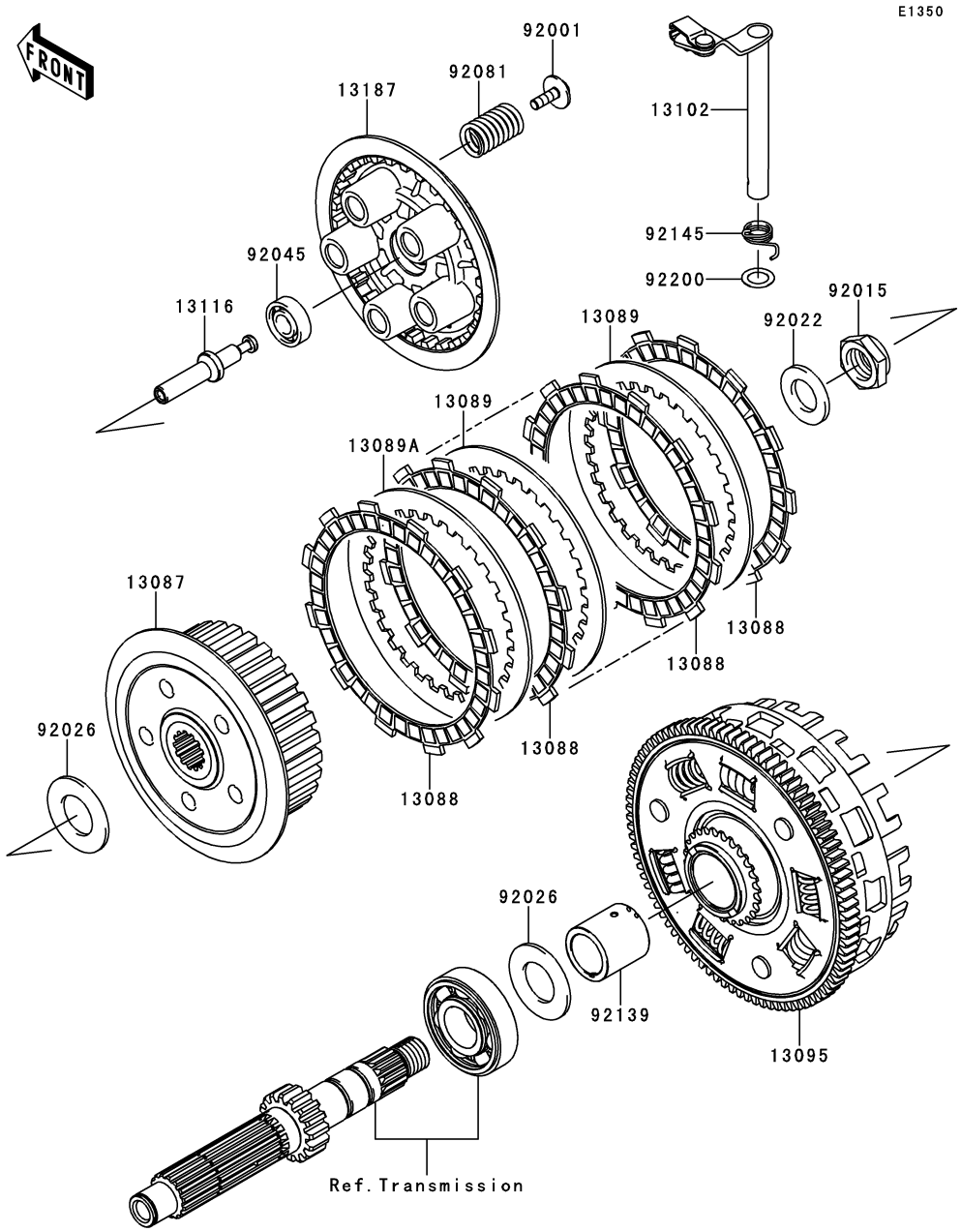

Ref. No.	Part No.	Description	Spec Code	Quantity-KLE650 '10 CAF
13087	13087-0042	HUB-CLUTCH		1
13088	13088-1105	PLATE-FRICTION		7
13089	13089-0016	PLATE-CLUTCH,T=2.3		5
13089A	13089-0017	PLATE-CLUTCH,T=2.6		1
13095	13095-0112	HOUSING-COMP-CLUTCH		1
13102	13102-0029	RELEASE-COMP-CLUTCH		1
13116	13116-0018	ROD-PUSH		1
13187	13187-1006	PLATE-CLUTCH OPERATING		1
92001	92001-1066	BOLT,FLANGED,6X18		5
92015	92015-1555	NUT,20MM		1
92022	92022-1868	WASHER,20.3X36X3.7		1
92026	92026-022	SPACER,25.5X47X2.5		2
92045	92045-1235	BEARING-BALL,6001C3ML01		1
92081	92081-1033	SPRING,CLUTCH		5
92139	92139-0106	BUSHING		1
92145	92145-0066	SPRING,CLUTCH RELEASE		1
92200	92200-1487	WASHER,12X18.5X0.5		1

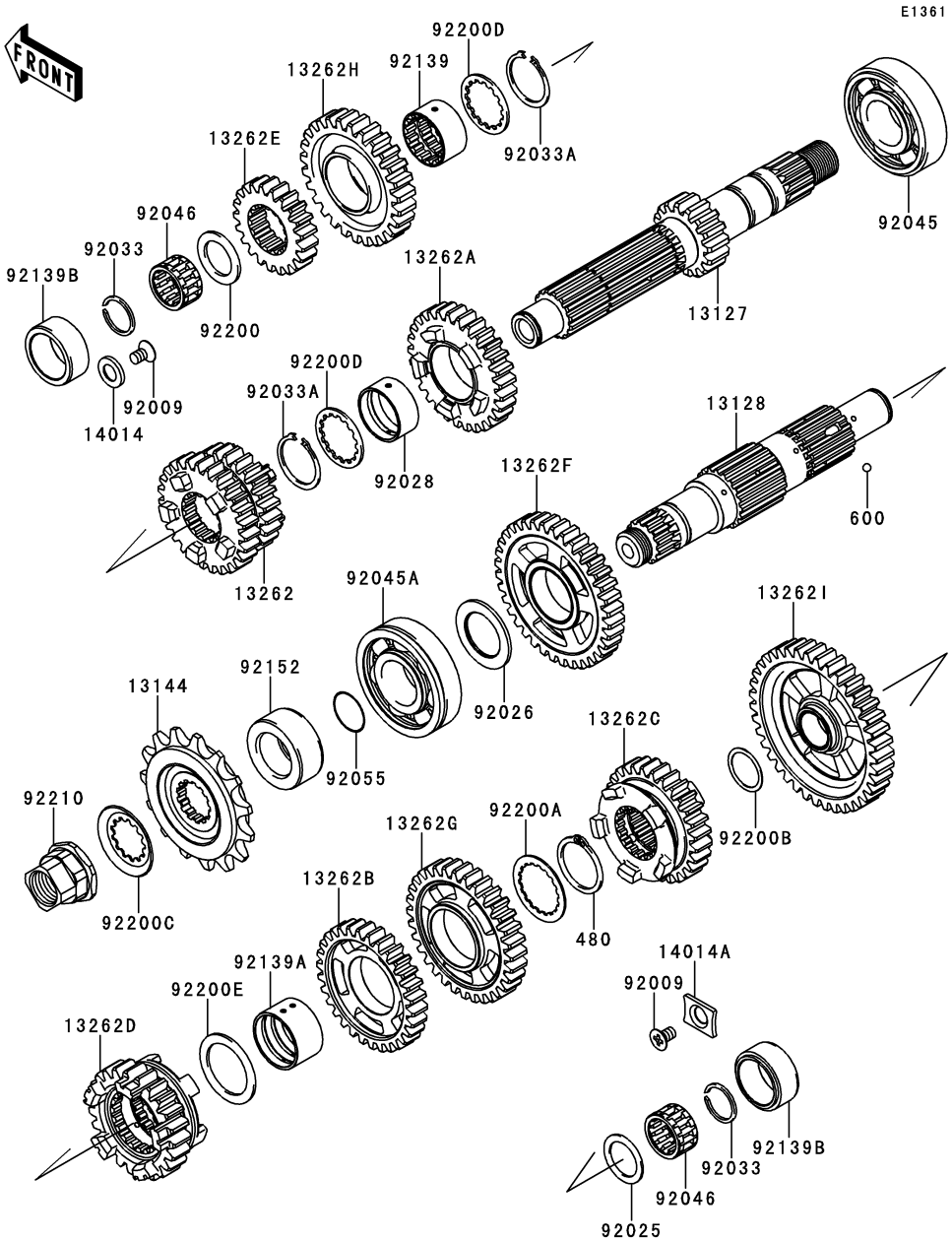

Ref. No.	Part No.	Description	Spec Code	Quantity-KLE650 ’10 CAF
13127	13127-0028	SHAFT-TRANSMISSION INPUT,16T		1
13128	13128-0020	SHAFT-TRANSMISSION OUTPUT		1
13144	13144-0024	SPROCKET-OUTPUT,15T,#520		1
13262	13262-0245	GEAR,INPUT 3RD&4TH,24T&27T		1
13262A	13262-0246	GEAR,INPUT 5TH,29T		1
13262B	13262-0251	GEAR,OUTPUT 4TH,30T		1
13262C	13262-0252	GEAR,OUTPUT 5TH,28T		1
13262D	13262-0253	GEAR,OUTPUT TOP,23T		1
13262E	13262-0335	GEAR,INPUT 2ND,21T		1
13262F	13262-0337	GEAR,OUTPUT 2ND,36T		1
13262G	13262-0338	GEAR,OUTPUT 3RD,32T		1
13262H	13262-0447	GEAR,INPUT TOP,27T		1
13262I	13262-0498	GEAR,OUTPUT LOW,39T		1
14014	14014-0019	PLATE-POSITION,9.5X17X2.3		1
14014A	14014-0020	PLATE-POSITION,RH		1
92009	92009-1375	SCREW,6X10		2
92025	92025-1455	SHIM,20.3X28X1.1		1
92026	92026-1529	SPACER,25.3X39X2.0		1
92028	92028-1449	BUSHING,INPUT GEAR		1
92033	92033-015	RING-SNAP,20MM		2
92033A	92033-1037	RING-SNAP,25.9X30.6X1.2		2
92045	92045-0042	BEARING-BALL,25X62X17		1
92045A	92045-1224	BEARING-BALL,6305N2SH2		1
92046	92046-1185	BEARING-NEEDLE,KMJ20X26X13.8X1		2
92055	92055-1293	RING-O,21.5X1.5		1
92139	92139-0107	BUSHING,INPUT TOP GEAR		1
92139A	92139-0108	BUSHING,OUT 3RD&4TH GEAR		1
92139B	92139-0120	BUSHING,BEARING-NEEDLE		2
92152	92152-0300	COLLAR,25X40X17.2		1
92200	92200-0221	WASHER,20.2X30X1.8		1
92200A	92200-0222	WASHER,30.3X38X1.0		1
92200B	92200-0291	WASHER,20.2X25.0X0.5		1
92200C	92200-1065	WASHER		1
92200D	92200-1240	WASHER,28.5X34.0X1.5		2
92200E	92200-1278	WASHER,29.9X40X1.5		1
92210	92210-0222	NUT,M20,L=24MM		1
480	480J2900	CIRCLIP		1
600	600A0500	BALL-STEEL,5/32"		3

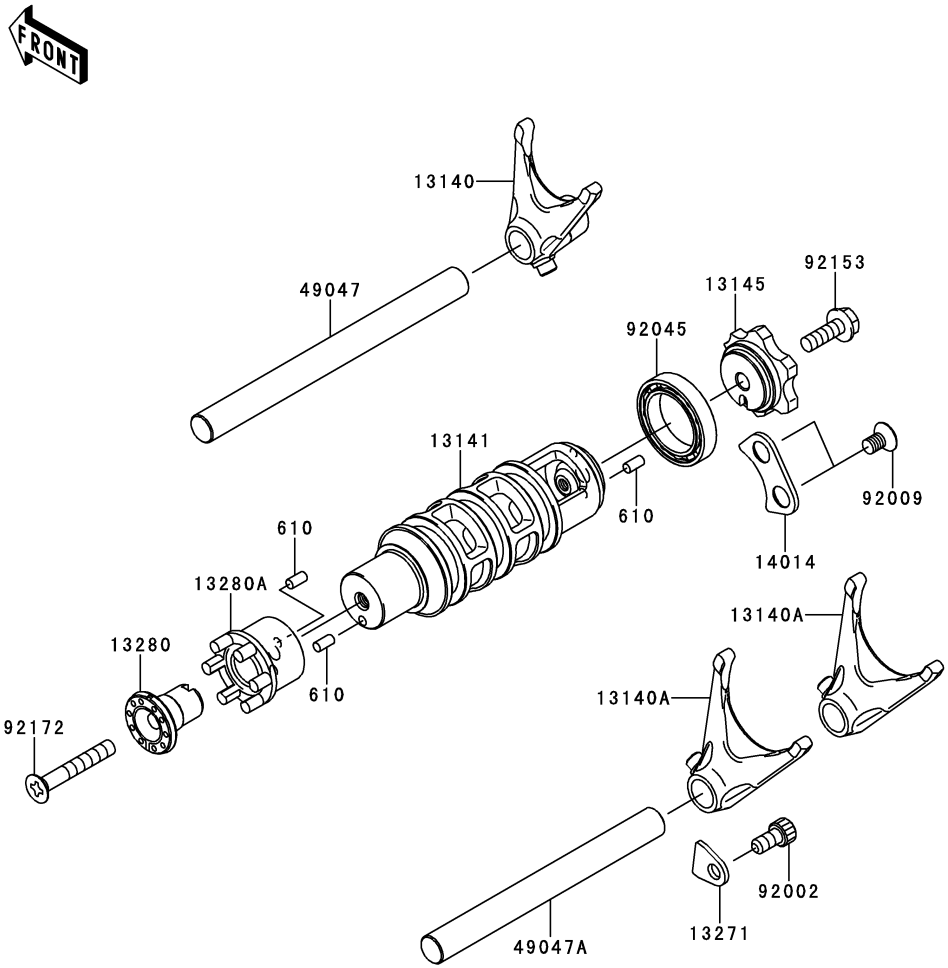

Ref. No.	Part No.	Description	Spec Code	Quantity-KLE650 ’10 CAF				
13140	13140-0025	FORK-SHIFT,INPUT		1				
13140A	13140-0026	FORK-SHIFT,OUTPUT		2				
13141	13141-0018	DRUM-CHANGE		1				
13145	13145-0020	CAM-CHANGE DRUM		1				
13271	13271-0626	PLATE		1				
13280	13280-0183	HOLDER,NEUTRAL SWITCH		1				
13280A	13280-0192	HOLDER		1				
14014	14014-0018	PLATE-POSITION		1				
49047	49047-0029	ROD-SHIFT,INPUT		1				
49047A	49047-0030	ROD-SHIFT,OUTPUT		1				
92002	92002-1796	BOLT,SOCKET,6X12		1				
92009	92009-1375	SCREW,6X10		2				
92045	92045-1122	BEARING-BALL,6805		1				
92153	92153-0958	BOLT,FLANGED,6X18		1				
92172	92172-0209	SCREW-CSK-CROS,6X40		1				
610	610A0408	ROLLER,4X8		3				

GRID NO. **C-3**

This grid covers:
Gear Change Mechanism

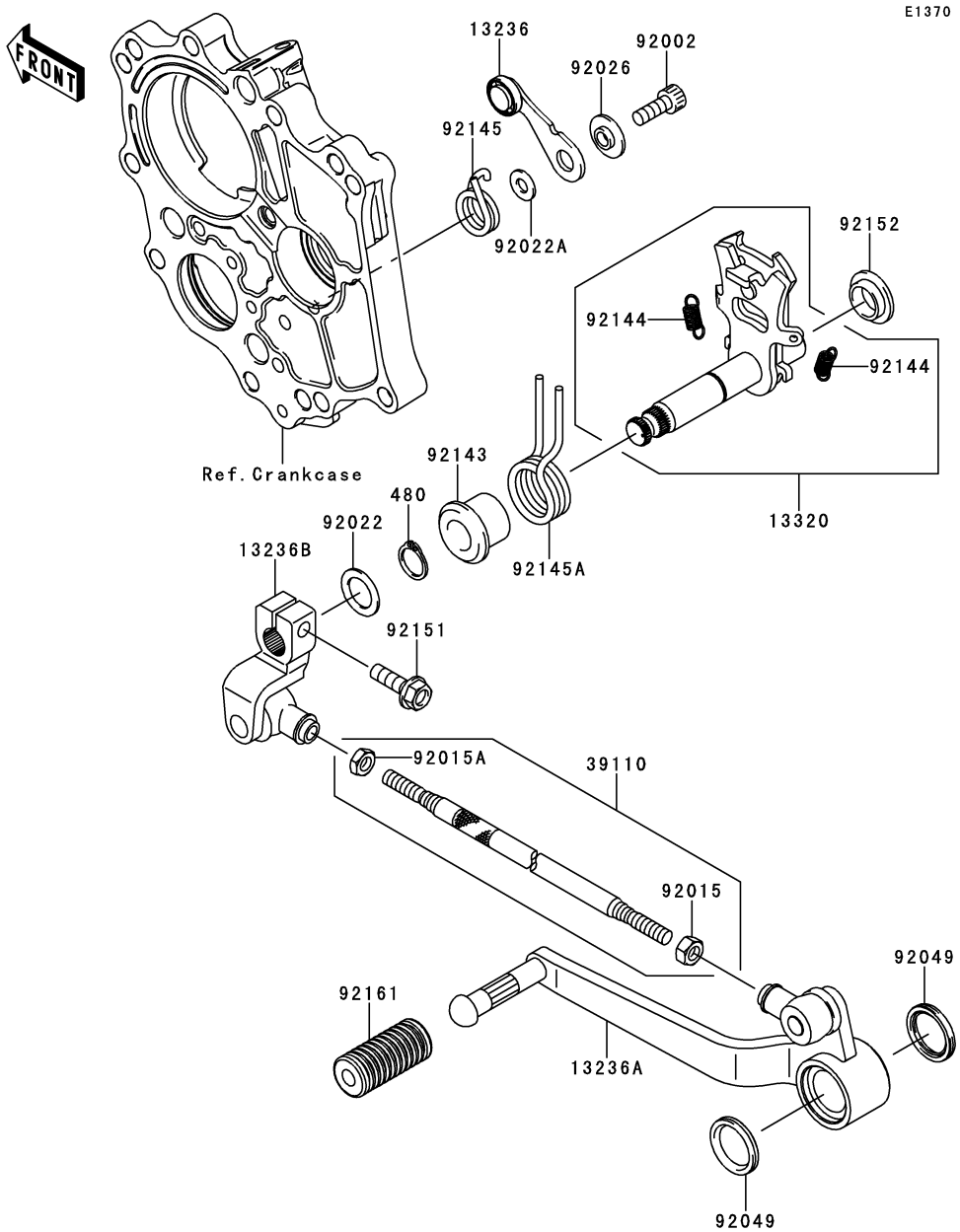

Ref. No.	Part No.	Description	Spec Code	Quantity-KLE650 '10 CAF
13236	13236-0094	LEVER-COMP,POSITION		1
13236A	13236-0136	LEVER-COMP,PEDAL		1
13236B	13236-0137	LEVER-COMP		1
13320	13320-0010	LEVER-ASSY		1
39110	39110-1124	ROD-ASSY-TIE		1
92002	92002-1778	BOLT,SOCKET,6X16		1
92015	92015-1443	NUT,6MM		1
92015A	92015-1444	NUT,LEFT HANDED,6MM		1
92022	92022-1496	WASHER,13.3X20X1		1
92022A	92022-1827	WASHER,6X12.8X1.2		1
92026	92026-1217	SPACER		1
92049	92049-0103	SEAL-OIL		2
92143	92143-1498	COLLAR,RETURN SPRING		1
92144	92144-1975	SPRING,CHANGE LEVER		2
92145	92145-0304	SPRING,POSITION		1
92145A	92145-0326	SPRING,RETURN		1
92151	92151-1226	BOLT,FLANGED,6X20		1
92152	92152-1075	COLLAR		1
92161	92161-1300	DAMPER,CHANGE PEDAL		1
480	480J1300	CIRCLIP-TYPE-C,13MM		1

This catalog covers:

’10 KLE650CAF Engine

GRID NO. **C-4**

This grid covers:

Crankcase(1/2)

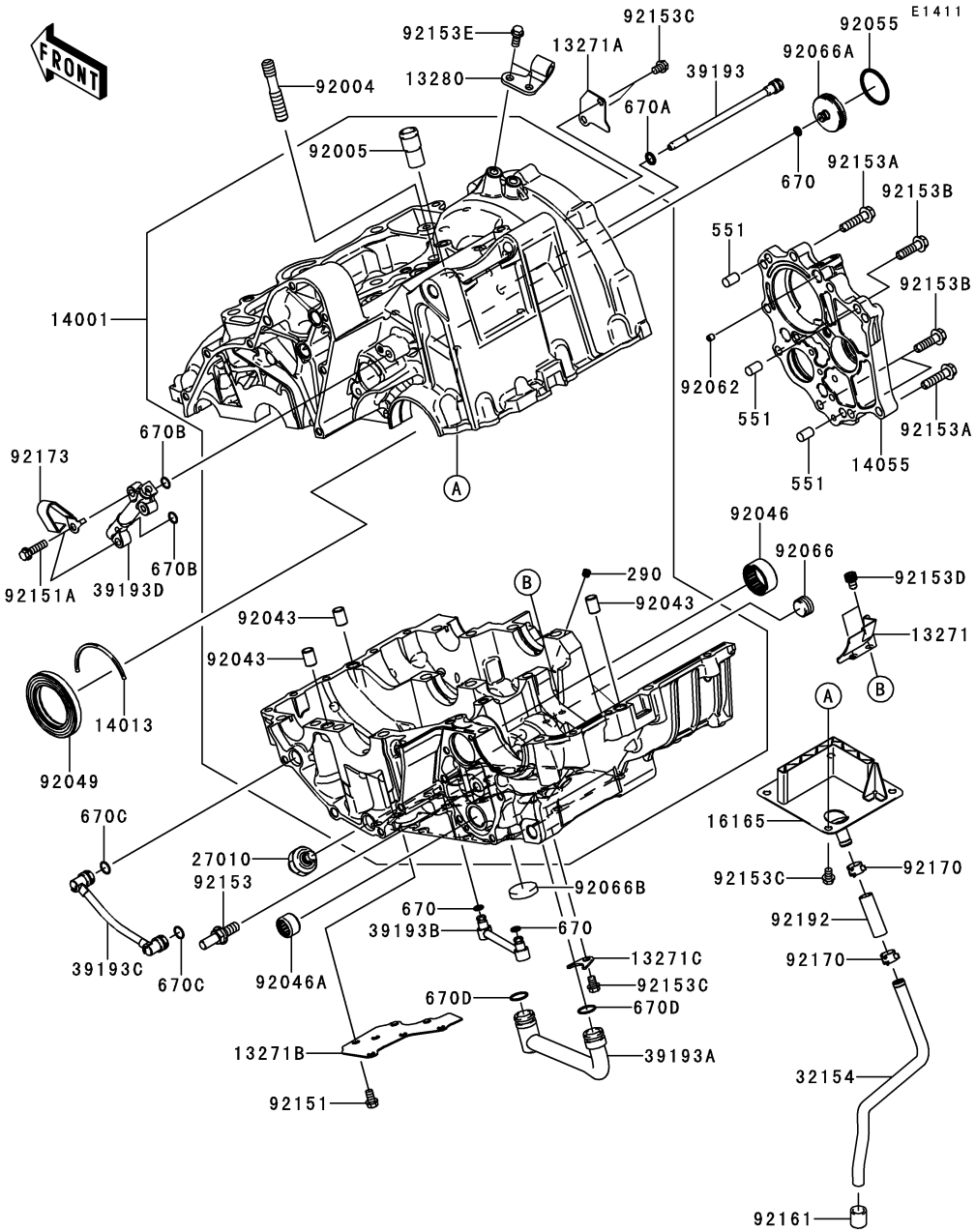

Ref. No.	Part No.	Description	Spec Code	Quantity-KLE650 ’10 CAF				
13271	13271-0575	PLATE,OIL SHIELDING		1				
13271A	13271-0577	PLATE		1				
13271B	13271-0584	PLATE		1				
13271C	13271-1187	PLATE,OIL PIPE		1				
13280	13280-0224	HOLDER,CLUTCH CABLE		1				
14001	14001-0142	SET-CRANKCASE		1				
14013	14013-1004	RING-POSITION,T=1.98		1				
14055	14055-0018	CASE-GEAR		1				
16165	16165-0001	SEPARATOR,BREATHER		1				
27010	27010-1313	SWITCH,OIL PRESSURE		1				
32154	32154-0661	PIPE,BREATHER		1				
39193	39193-0029	PIPE-OIL		1				
39193A	39193-0031	PIPE-OIL		1				
39193B	39193-0032	PIPE-OIL		1				
39193C	39193-0033	PIPE-OIL		1				
39193D	39193-0046	PIPE-OIL		1				
92004	92004-0024	STUD,10X34.5		1				
92005	92005-1238	FITTING,BREATHER		1				
92043	92043-1037	PIN,DOWEL,10X14		3				
92046	92046-0017	BEARING-NEEDLE,24BTM3013		1				
92046A	92046-1148	BEARING-NEEDLE,HK1312		1				
92049	92049-1501	SEAL-OIL,HTC40628		1				
92055	92055-0006	RING-O,29.7X2.4		1				
92062	92062-1086	NOZZLE,5X6,SILVER		1				
92066	92066-0003	PLUG,PT3/8X10		1				
92066A	92066-0056	PLUG,INPUT SHAFT		1				
92066B	92066-0061	PLUG,25X5		1				
92151	92151-1389	BOLT,FLANGED-SMALL,6X10		6				
92151A	92151-1937	BOLT,6X22		2				
92153	92153-0530	BOLT,8X20		1				
92153A	92153-0962	BOLT,FLANGED,6X30		6				
92153B	92153-0963	BOLT,FLANGED,7X26		3				
92153C	92153-0964	BOLT,FLANGED-SMALL,6X8		7				
92153D	92153-1414	BOLT,SOCKET,6X8		2				
92153E	92153-1805	BOLT		2				
92161	92161-0267	DAMPER		1				
92170	92170-1167	CLAMP		2				
92173	92173-0059	CLAMP		1				
92192	92192-0225	TUBE,9X12X38		1				
290	290Q0606	SCREW-SET-SOCKET,6X6		1				

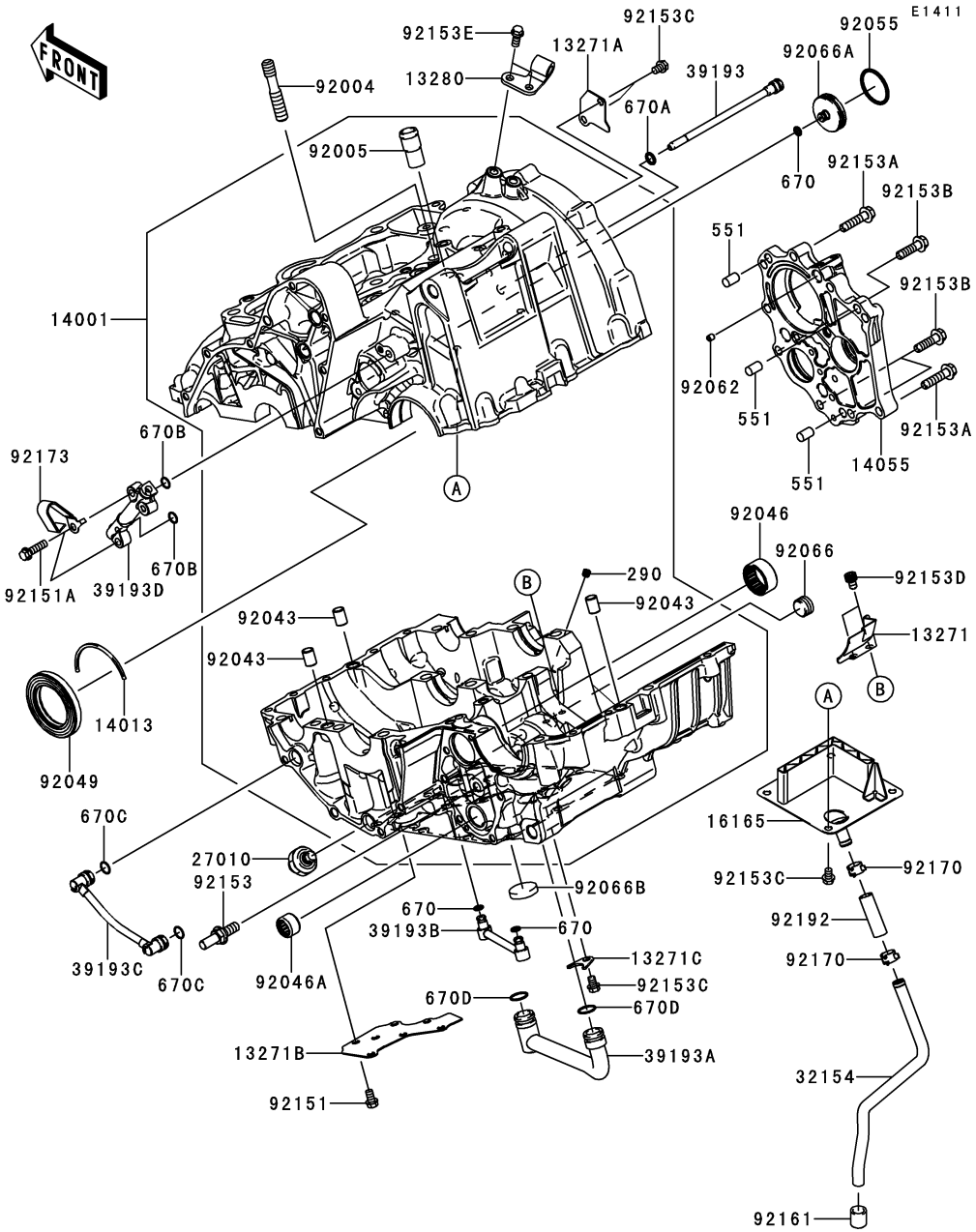

Ref. No.	Part No.	Description	Spec Code	Quantity-KLE650				
				’10				
				CAF				
551	551A0814	PIN-DOWEL,8X14		3				
670	670D1505	O RING		3				
670A	670D1508	O RING,8MM		1				
670B	670D1509	O RING,9MM		2				
670C	670D1510	O RING,10MM		2				
670D	670D2014	O RING,14MM		2				

E1412

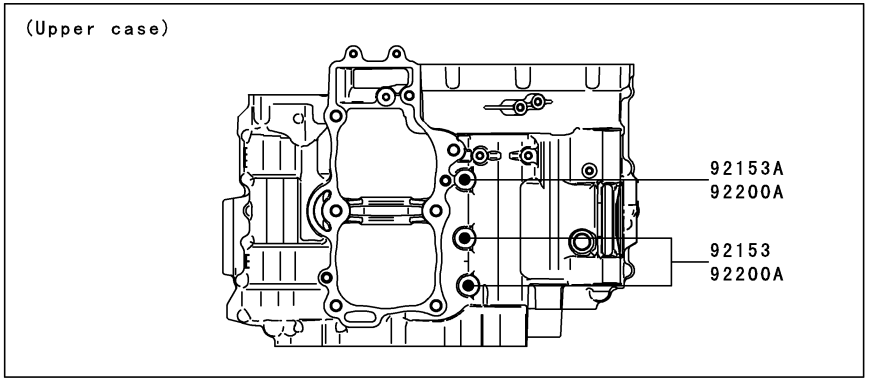

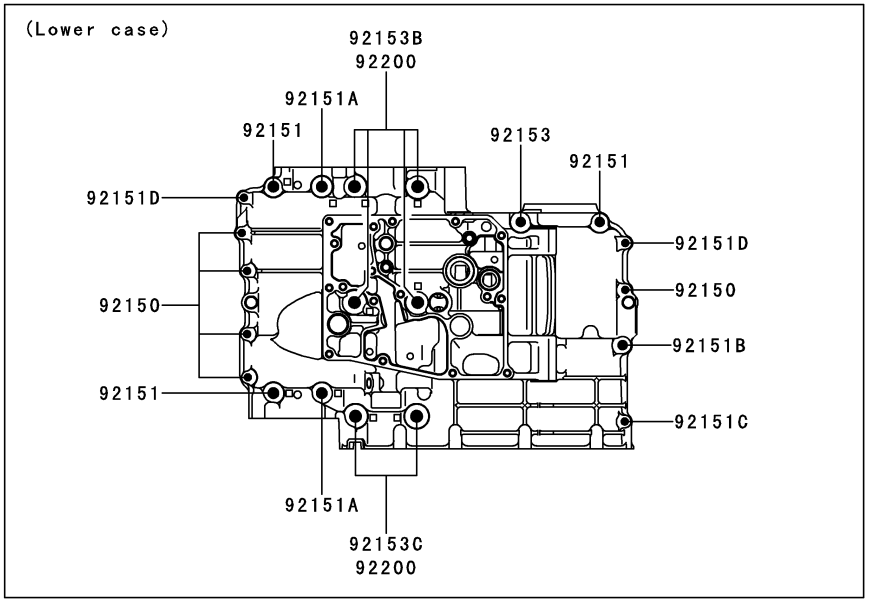

Ref. No.	Part No.	Description	Spec Code	Quantity-KLE650 ’10 CAF
92150	92150-1301	BOLT,6X38		5
92151	92151-1461	BOLT,8X60		3
92151A	92151-1462	BOLT,8X73		2
92151B	92151-1463	BOLT,8X50		1
92151C	92151-1464	BOLT,6X32		1
92151D	92151-1465	BOLT,6X45		2
92153	92153-0959	BOLT,FLANGED,8X110		3
92153A	92153-0960	BOLT,FLANGED,8X120		1
92153B	92153-1449	BOLT,FLANGED,9X113		4
92153C	92153-1450	BOLT,FLANGED,9X83		2
92200	92200-0115	WASHER,9.2X19X23		6
92200A	92200-1063	WASHER,8.5X16X1.2		3

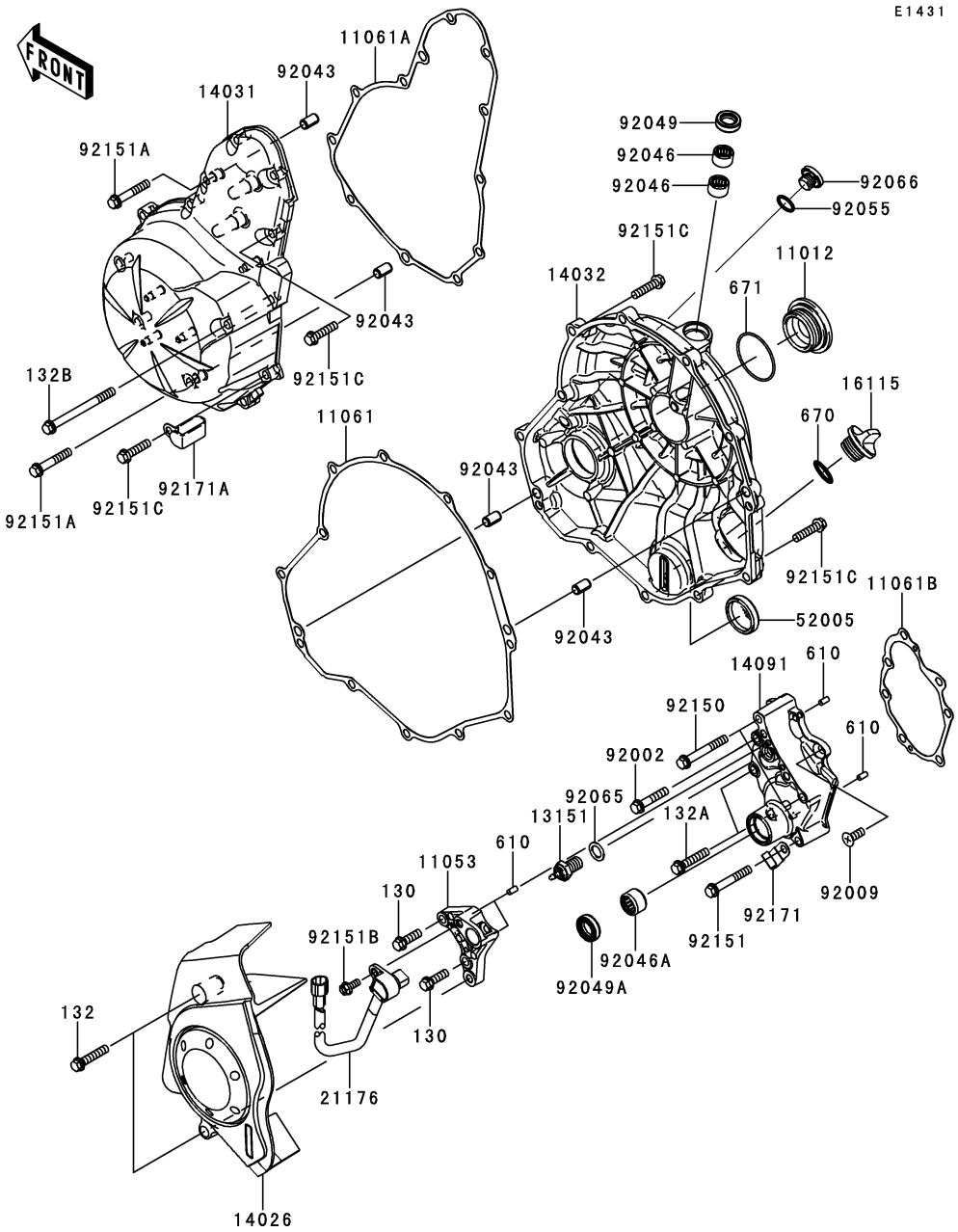

Ref. No.	Part No.	Description	Spec Code	Quantity-KLE650 '10 CAF
11012	11012-1817	CAP,GENERATOR		1
11053	11053-1739	BRACKET		1
11061	11061-0164	GASKET,CLUTCH COVER		1
11061A	11061-0165	GASKET,GENERATOR COVER		1
11061B	11061-0166	GASKET,TRANSMISSION COVER		1
13151	13151-1080	SWITCH-COMP,NEUTRAL		1
14026	14026-0076	COVER-CHAIN		1
14031	14031-0096	COVER-GENERATOR		1
14032	14032-0115	COVER-CLUTCH		1
14091	14091-0720	COVER,TRANSMISSION		1
16115	16115-1053	CAP-OIL FILLER		1
21176	21176-0065	SENSOR,SPEED		1
52005	52005-0071	GAUGE,OIL LEVEL		1
92002	92002-1534	BOLT,6X30		1
92009	92009-1360	SCREW,6X16		1
92043	92043-1263	PIN,6.2X8X14		4
92046	92046-1010	BEARING-NEEDLE,HK1210		2
92046A	92046-1148	BEARING-NEEDLE,HK1312		1
92049	92049-1475	SEAL-OIL,CLUTCH RELEASE		1
92049A	92049-1519	SEAL-OIL,TC13225.5		1
92055	92055-1011	RING-O,13.0X1.9		1
92065	92065-058	GASKET,10.5X16X1		1
92066	92066-0154	PLUG		1
92150	92150-1884	BOLT,6X45		2
92151	92151-1131	BOLT,6X40		1
92151A	92151-1135	BOLT,6X35		2
92151B	92151-1305	BOLT,FLANGED,5X12		1
92151C	92151-1930	BOLT,FLANGED-SMALL,6X25		21
92171	92171-0813	CLAMP		1
92171A	92171-0911	CLAMP		1
130	130BA0620	BOLT-FLANGED,6X20		2
132	132BB0630	BOLT-FLANGED-SMALL,6X30		2
132A	132BC0630	BOLT-FLANGED-SMALL,6X30		2
132B	132BC0670	BOLT-FLANGED-SMALL,6X70		1
610	610A0408	ROLLER,4X8		4
670	670B2020	O RING,20MM		1
671	671B2540	O RING,40MM		1

GRID NO. **C-8**

This grid covers:
Oil Pan

E1434

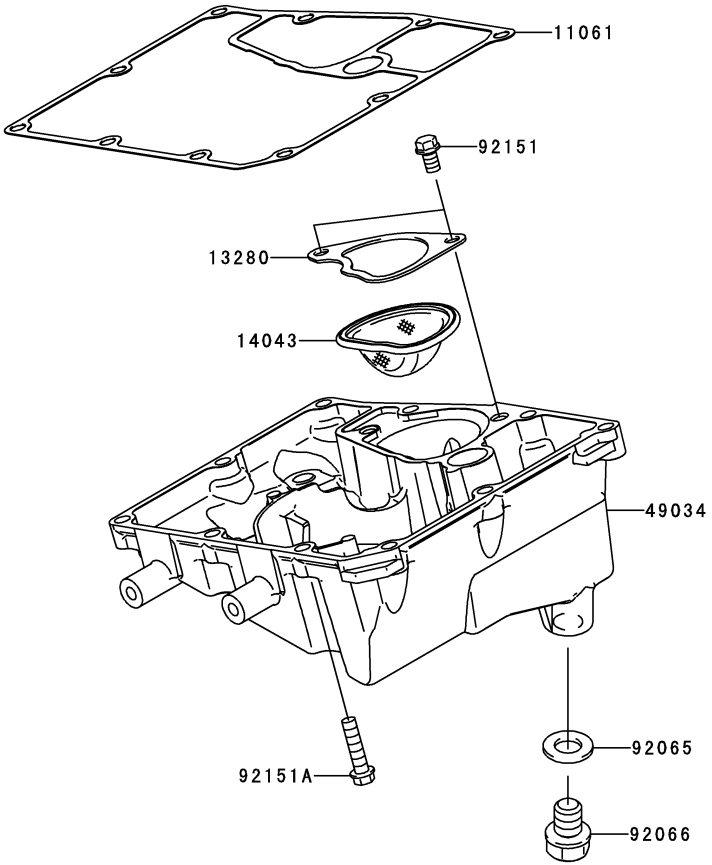

Ref. No.	Part No.	Description	Spec Code	Quantity-KLE650 '10 CAF				
11061	11061-0167	GASKET,OIL PAN		1				
13280	13280-0134	HOLDER,OIL FILTER		1				
14043	14043-0008	FILTER,OIL(SCAVENGE)		1				
49034	49034-0037	PAN-OIL		1				
92065	92065-097	GASKET,12X22X2		1				
92066	92066-1174	PLUG,OIL DRAIN,12X15		1				
92151	92151-1389	BOLT,FLANGED-SMALL,6X10		2				
92151A	92151-1930	BOLT,FLANGED-SMALL,6X25		10				

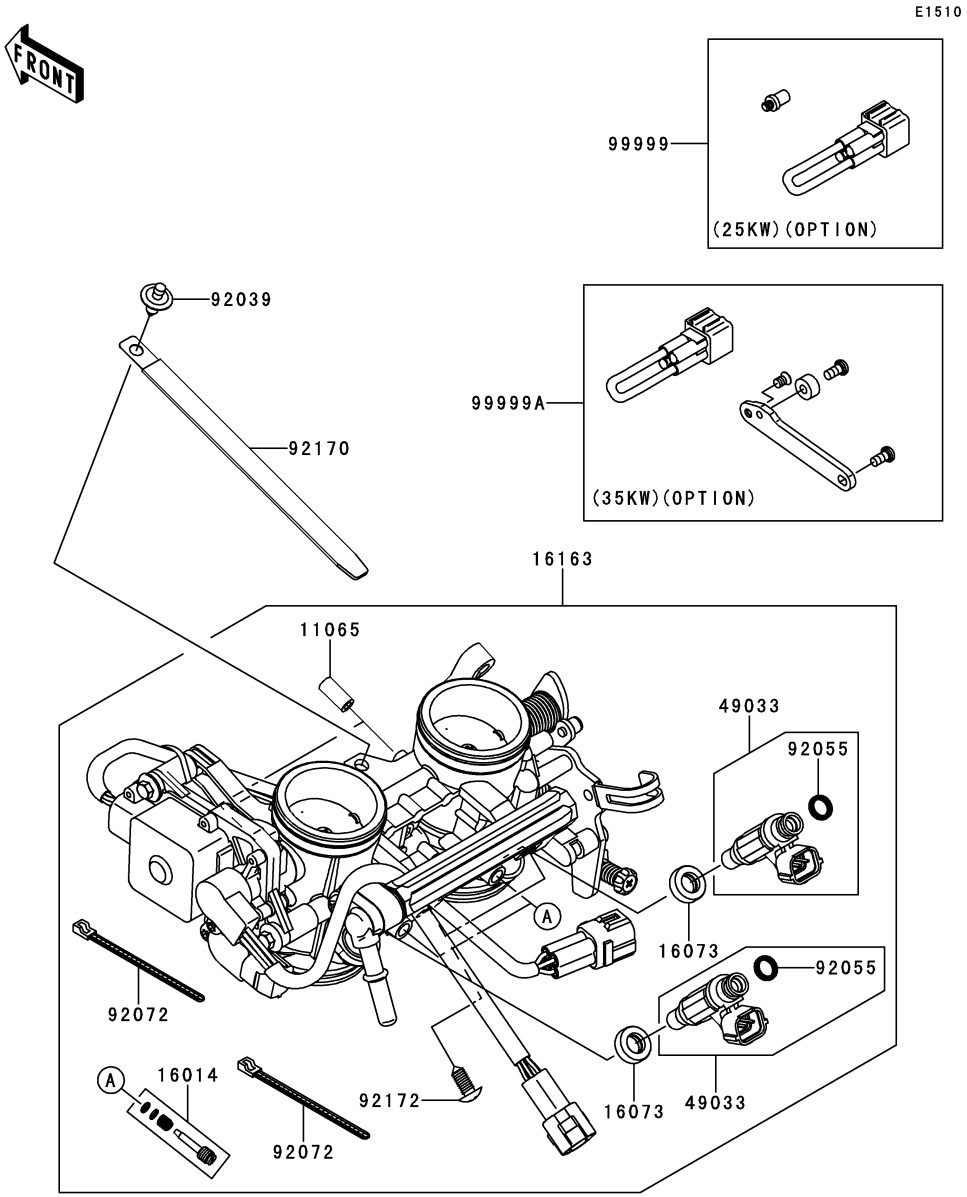

Ref. No.	Part No.	Description	Spec Code	Quantity-KLE650 '10 CAF
11065	11065-0018	CAP		2
16014	16014-0002	SCREW-PILOT AIR		2
16073	16073-3707	INSULATOR		2
16163	16163-0099	THROTTLE-ASSY,TTK38		1
49033	49033-0011	NOZZLE-INJECTION		2
92039	92039-0068	RIVET		1
92055	92055-1622	RING-O,INJECTION NOZZLE		2
92072	92072-0012	BAND,SUB-HARNESS		2
92170	92170-1114	CLAMP,L=150		1
92172	92172-0064	SCREW,PIPE INJECTION		2
99999	99999-0270 (OPTION)	KIT.,25KW		1
99999A	99999-0272 (OPTION)	KIT.,35KW,FOR SPAIN		1

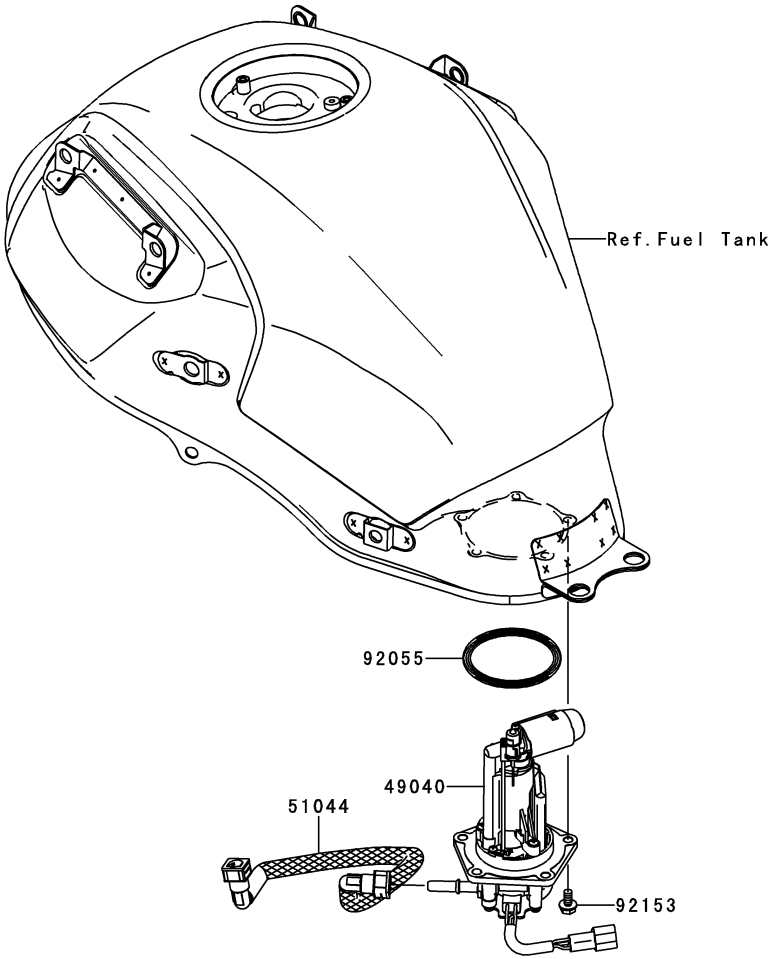

Ref. No.	Part No.	Description	Spec Code	Quantity-KLE650 '10 CAF				
49040	49040-0026	PUMP-FUEL		1				
51044	51044-0034	TUBE-ASSY		1				
92055	92055-0185	RING-O,64.6X5.7		1				
92153	92153-1295	BOLT,FLANGED,6X12		5				

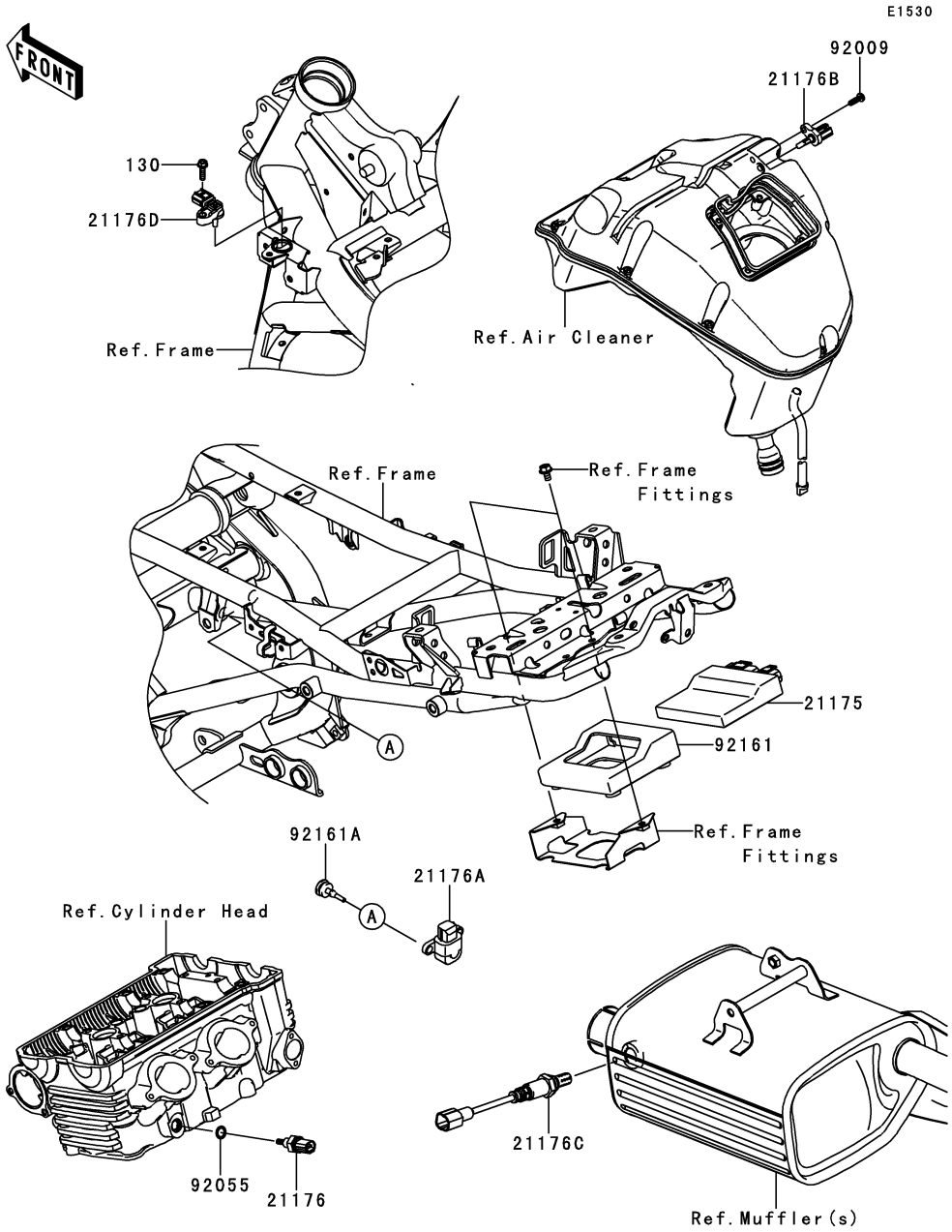

Ref. No.	Part No.	Description	Spec Code	Quantity-KLE650				
				’10				
				CAF				
21175	21175-0204	CONTROL UNIT-ELECTRONIC		1				
21176	21176-0009	SENSOR,WATER TEMP		1				
21176A	21176-0026	SENSOR,VEHICLE-DOWN		1				
21176B	21176-0048	SENSOR,AIR TEMPERATURE		1				
21176C	21176-0105	SENSOR,OXYGEN		1				
21176D	21176-0111	SENSOR,PRESSURE		1				
92009	92009-1984	SCREW,TAPPING,5X16		1				
92055	92055-0016	RING-O,9.5X1.9		1				
92161	92161-0630	DAMPER,ECU		1				
92161A	92161-0839	DAMPER		2				
130	130BA0518	BOLT-FLANGED,5X18		1				

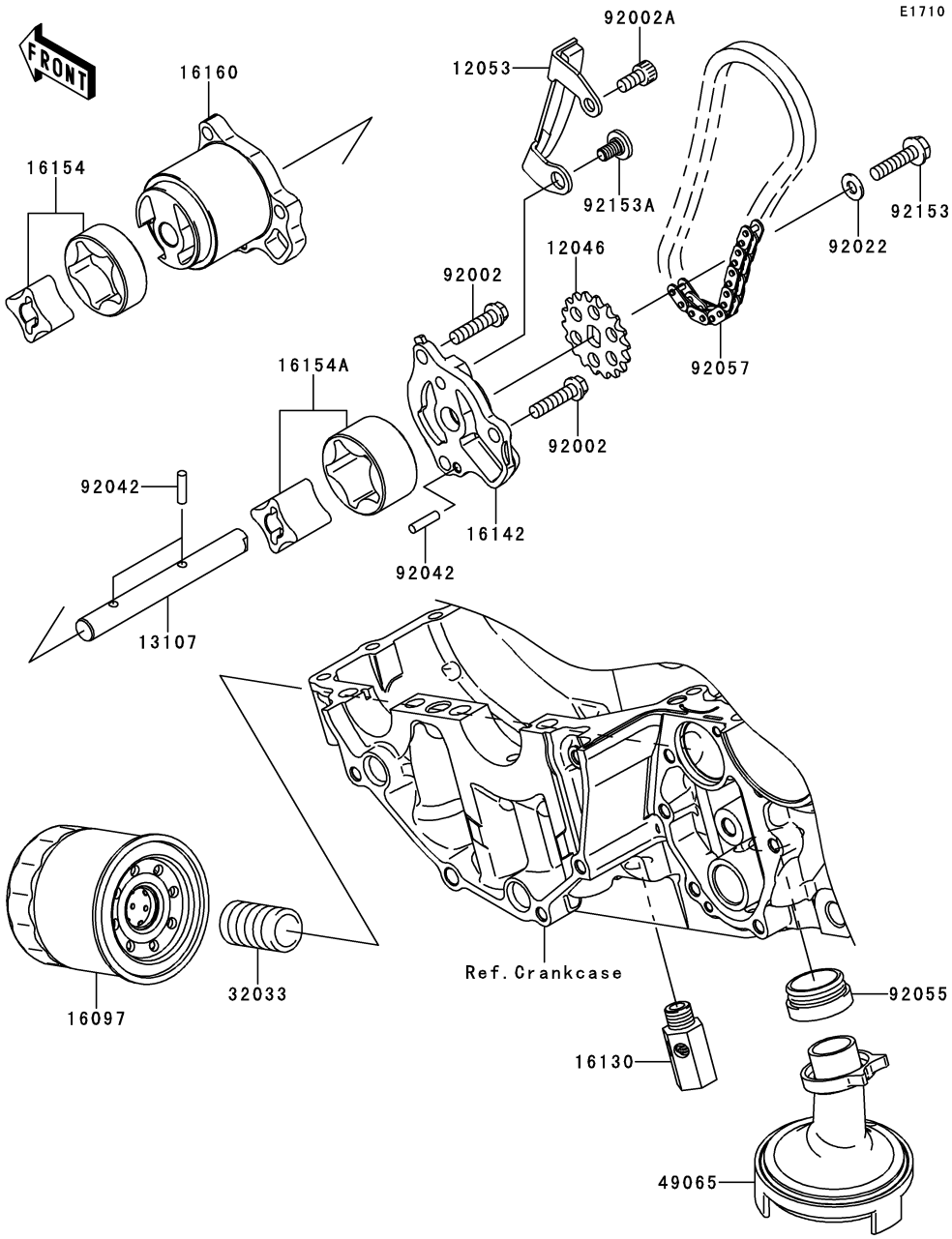

Ref. No.	Part No.	Description	Spec Code	Quantity-KLE650 '10 CAF
12046	12046-0040	SPROCKET,18T,BF04M		1
12053	12053-0071	GUIDE-CHAIN		1
13107	13107-0156	SHAFT,OIL PUMP		1
16097	16097-0004	FILTER-ASSY-OIL		1
16130	16130-1058	VALVE-ASSY-RELIEF		1
16142	16142-0024	COVER-PUMP		1
16154	16154-0037	ROTOR-PUMP,L=14		1
16154A	16154-1115	ROTOR-PUMP,40.56X22		1
16160	16160-0110	BODY		1
32033	32033-1535	PIPE,OIL FILTER		1
49065	49065-0011	FILTER-OIL		1
92002	92002-1344	BOLT,6X25		3
92002A	92002-1796	BOLT,SOCKET,6X12		1
92022	92022-1827	WASHER,6X12.8X1.2		1
92042	92042-014	PIN,DOWEL,4X15.8		3
92055	92055-1354	RING-O,OIL FILTER		1
92057	92057-0098	CHAIN,DID 215FD-DHA,56LE		1
92153	92153-0952	BOLT,FLANGED,6X25		1
92153A	92153-0969	BOLT,SOCKET,6X11		1

E1810

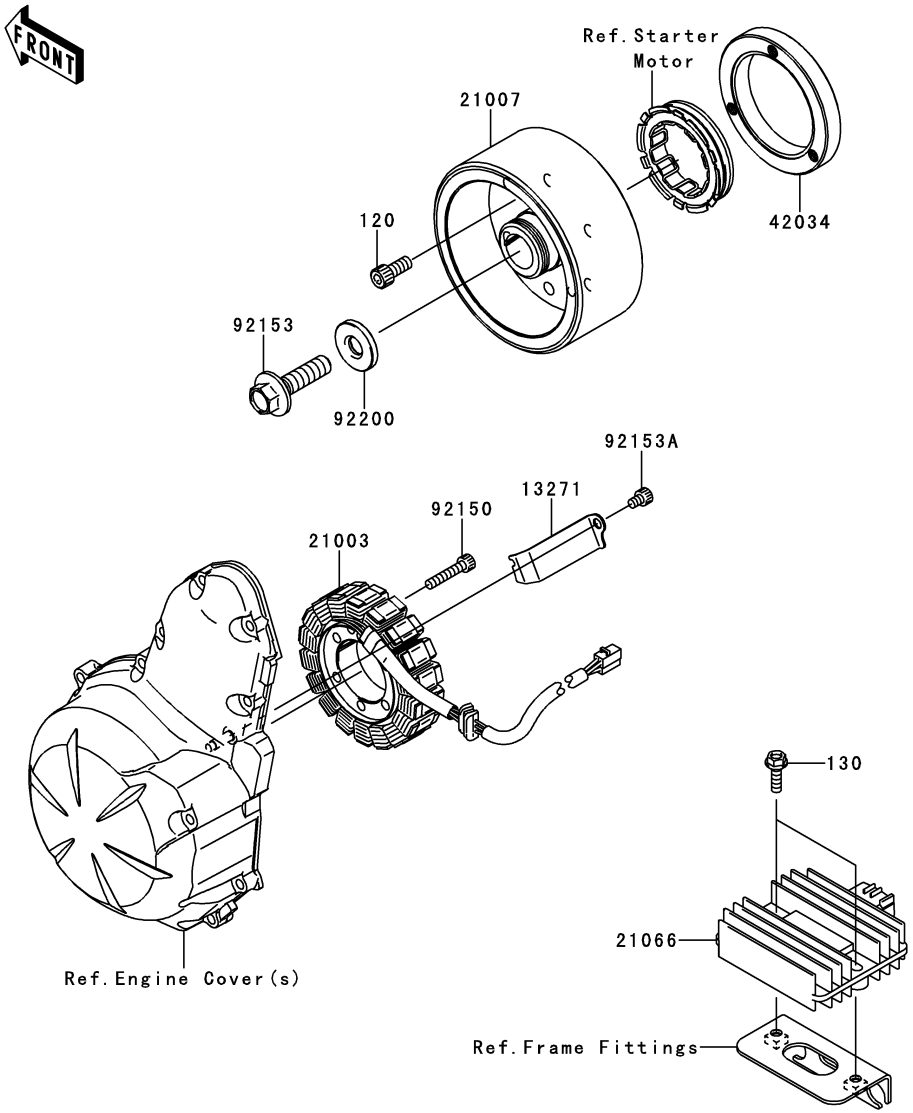

Ref. No.	Part No.	Description	Spec Code	Quantity-KLE650 ’10 CAF				
13271	13271-0952	PLATE		1				
21003	21003-0042	STATOR		1				
21007	21007-0075	ROTOR		1				
21066	21066-1127	REGULATOR-VOLTAGE		1				
42034	42034-1143	COUPLING		1				
92150	92150-1433	BOLT,SOCKET,6X30		3				
92153	92153-0951	BOLT,FLANGED,12X45		1				
92153A	92153-1414	BOLT,SOCKET,6X8		1				
92200	92200-0220	WASHER,12X33X5		1				
120	120CA0818	BOLT-SOCKET,8X18		3				
130	130BA0620	BOLT-FLANGED,6X20		2				

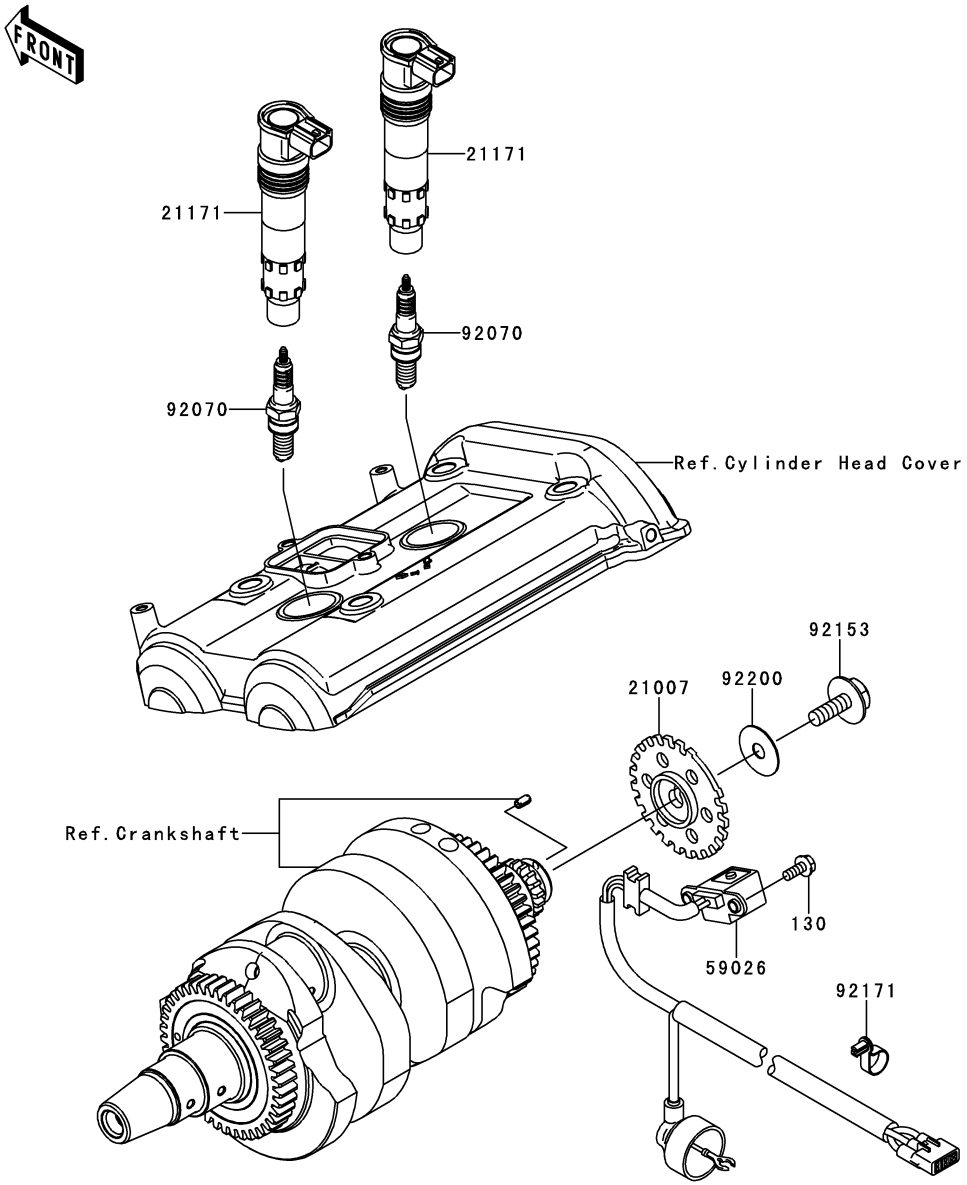

Ref. No.	Part No.	Description	Spec Code	Quantity-KLE650 ’10				
				CAF				
21007	21007-0053	ROTOR,PULSING		1				
21171	21171-0028	COIL-ASSY-IGNITION		2				
59026	59026-0018	COIL-PULSING		1				
92070	92070-0014	PLUG-SPARK,CR9EIA(NGK)		AR				
92153	92153-0549	BOLT,FLANGED,8X23		1				
92171	92171-0836	CLAMP,SPEED		1				
92200	92200-0274	WASHER,8.5X28X0.8		1				
130	130BA0512	BOLT-FLANGED,5X12		2				

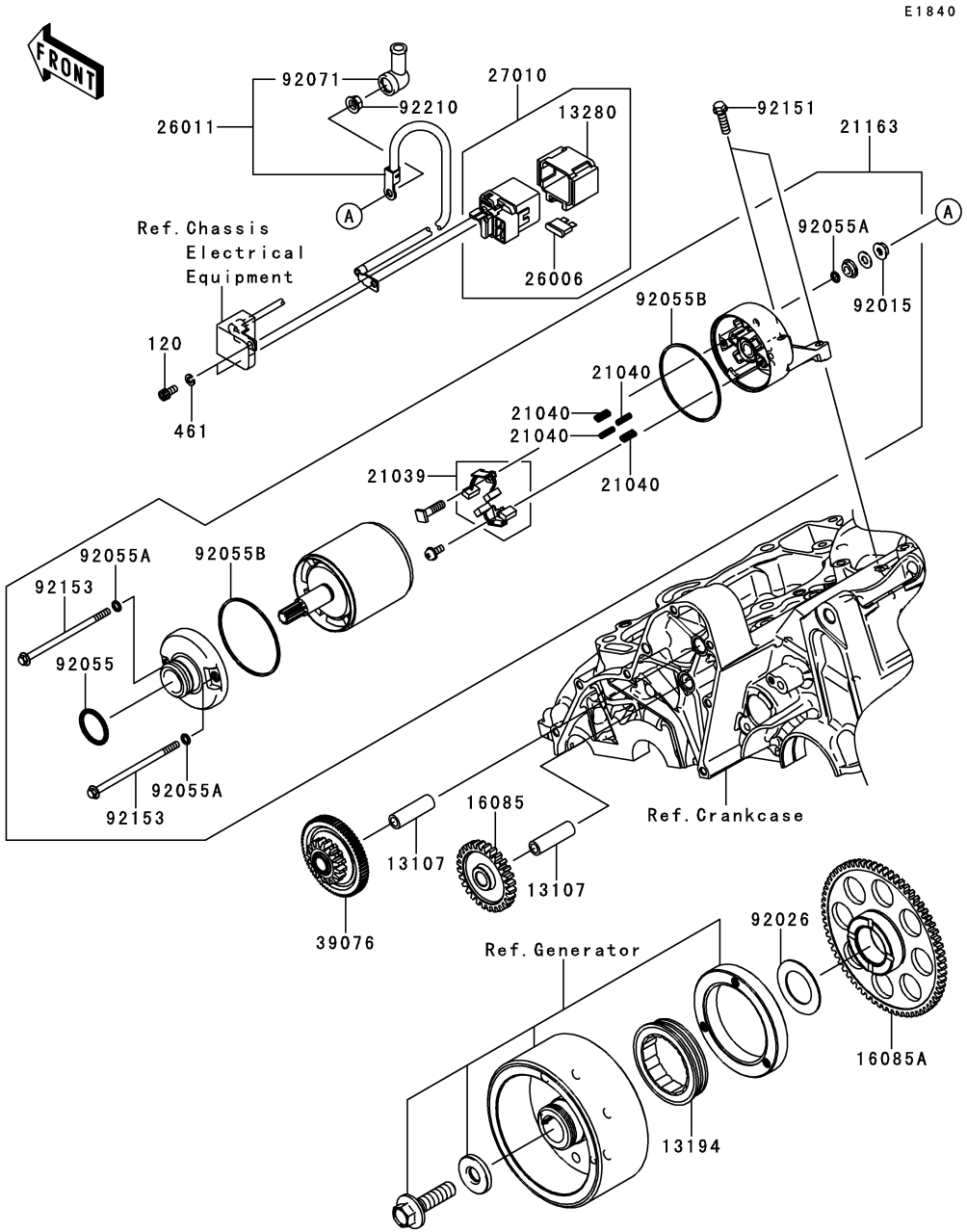

Ref. No.	Part No.	Description	Spec Code	Quantity-KLE650 ’10 CAF
13107	13107-1106	SHAFT,IDLE GEAR		2
13194	13194-1083	CLUTCH-ONEWAY		1
13280	13280-1263	HOLDER		1
16085	16085-0074	GEAR,IDLE,28T		1
16085A	16085-0076	GEAR,67T		1
21039	21039-0004	BRUSH,CARBON		1
21040	21040-0003	SPRING-BRUSH		4
21163	21163-0040	STARTER-ELECTRIC		1
26006	26006-1006	FUSE,30A-G		1
26011	26011-0161	WIRE-LEAD		1
27010	27010-1446	SWITCH,MAGNETIC		1
39076	39076-0006	LIMITER,16T&66T		1
92015	92015-1476	NUT,STARTER MOTOR		1
92026	92026-087	SPACER,29.1X47.5X1.2		1
92055	92055-1276	RING-O		1
92055A	92055-1370	RING-O,4.5X2.0		3
92055B	92055-1381	RING-O,STARTER MOTOR		2
92071	92071-0024	GROMMET		1
92151	92151-1937	BOLT,6X22		2
92153	92153-1783	BOLT		2
92210	92210-0188	NUT,6MM		1
120	120CB0510	BOLT-SOCKET,5X10		2
461	461DB0500	WASHER-SPRING,5MM,BLACK		2

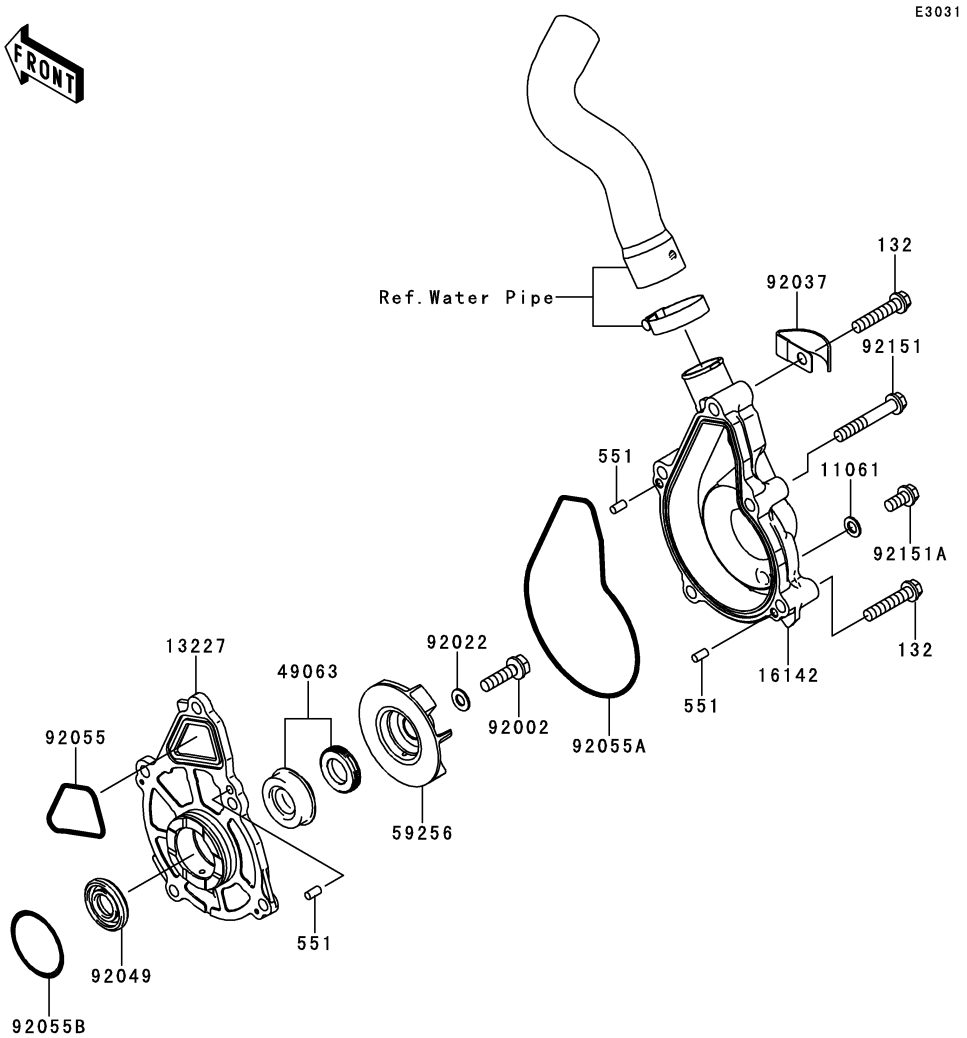

Ref. No.	Part No.	Description	Spec Code	Quantity-KLE650 '10 CAF				
11061	11061-0107	GASKET		1				
13227	13227-0012	HOUSING		1				
16142	16142-0046	COVER-PUMP		1				
49063	49063-1055	SEAL-MECHANICAL,WATER		1				
59256	59256-0007	IMPELLER		1				
92002	92002-1154	BOLT,6X22		1				
92022	92022-077	WASHER,6.1X12X1		1				
92037	92037-1680	CLAMP		1				
92049	92049-0115	SEAL-OIL,12X28.55X5		1				
92055	92055-0082	RING-O,CASE-HOUSING		1				
92055A	92055-0083	RING-O,HOUSING-PUMP COVER		1				
92055B	92055-1155	RING-O,33.2MM		1				
92151	92151-1131	BOLT,6X40		3				
92151A	92151-1133	BOLT-FLANGED-SMALL,6X12		1				
132	132BC0630	BOLT-FLANGED-SMALL,6X30		2				
551	551A0408	PIN-DOWEL,4X8		3				

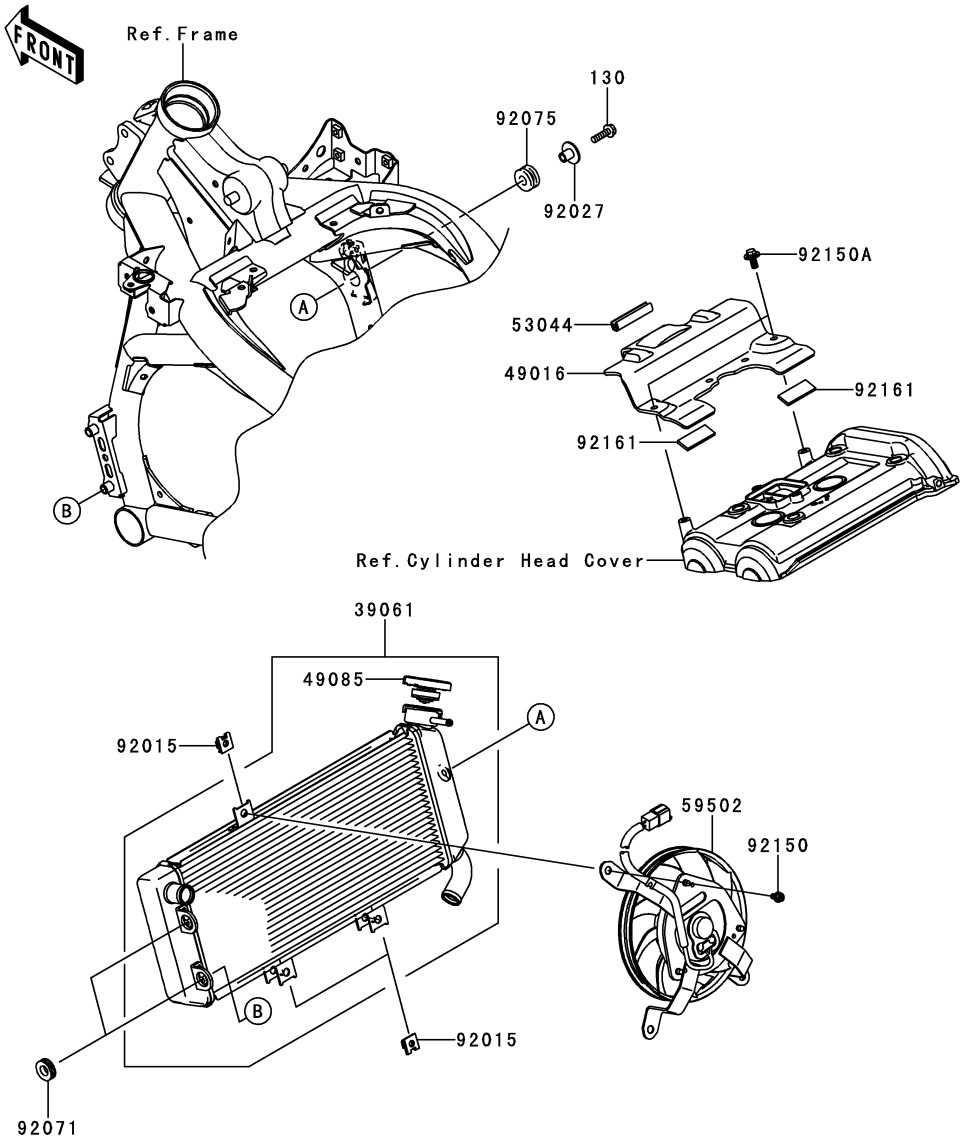

Ref. No.	Part No.	Description	Spec Code	Quantity-KLE650 '10 CAF				
39061	39061-0144	RADIATOR-ASSY		1				
49016	49016-0033	COVER-SEAL,HOT WIND		1				
49085	49085-1066	CAP-ASSY-PRESSURE		1				
53044	53044-1185	TRIM,L=50		1				
59502	59502-0041	FAN-ASSY		1				
92015	92015-1487	NUT		3				
92027	92027-251	COLLAR,L=13.1		1				
92071	92071-1115	GROMMET		2				
92075	92075-1690	DAMPER		1				
92150	92150-1186	BOLT,6X12		3				
92150A	92150-1689	BOLT,FLANGED,6X14		2				
92161	92161-0301	DAMPER		2				
130	130BA0622	BOLT-FLANGED,6X22		1				

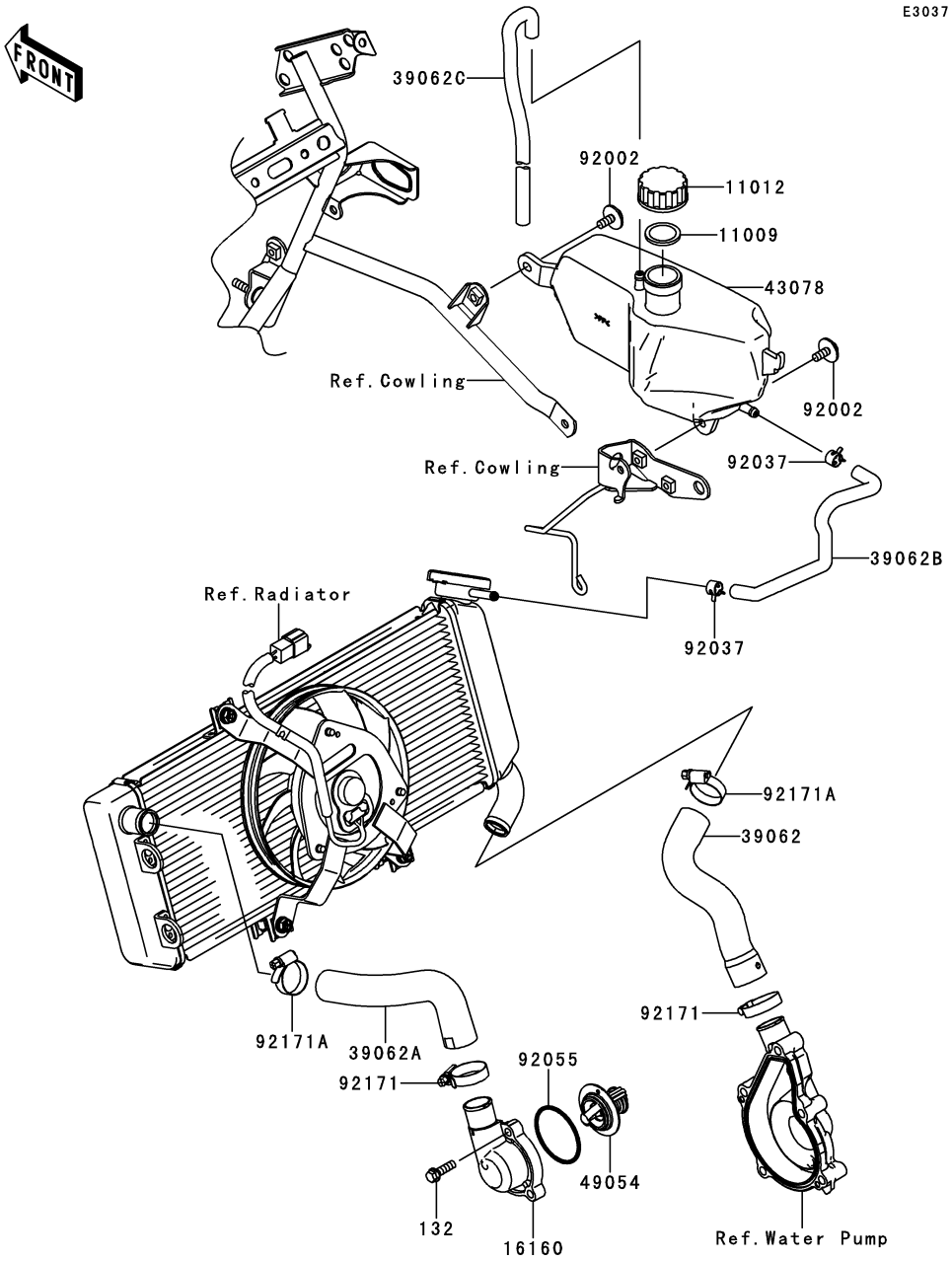

Ref. No.	Part No.	Description	Spec Code	Quantity-KLE650 ’10	CAF			
11009	11009-1145	GASKET,RESERVOIR TANK CAP		1				
11012	11012-1084	CAP		1				
16160	16160-0118	BODY,THERMOSTAT		1				
39062	39062-0161	HOSE-COOLING,W.PUMP-RAD		1				
39062A	39062-0162	HOSE-COOLING,HEAD-RAD		1				
39062B	39062-0163	HOSE-COOLING,RAD-RESERVOIR		1				
39062C	39062-0164	HOSE-COOLING,BREATHER		1				
43078	43078-0065	RESERVOIR		1				
49054	49054-0001	THERMOSTAT		1				
92002	92002-1188	BOLT,6X16		2				
92037	92037-1505	CLAMP,TUBE		2				
92055	92055-1279	RING-O,44.7X2.4		1				
92171	92171-0261	CLAMP		2				
92171A	92171-0337	CLAMP		2				
132	132BC0620	BOLT-FLANGED-SMALL,6X20		3				

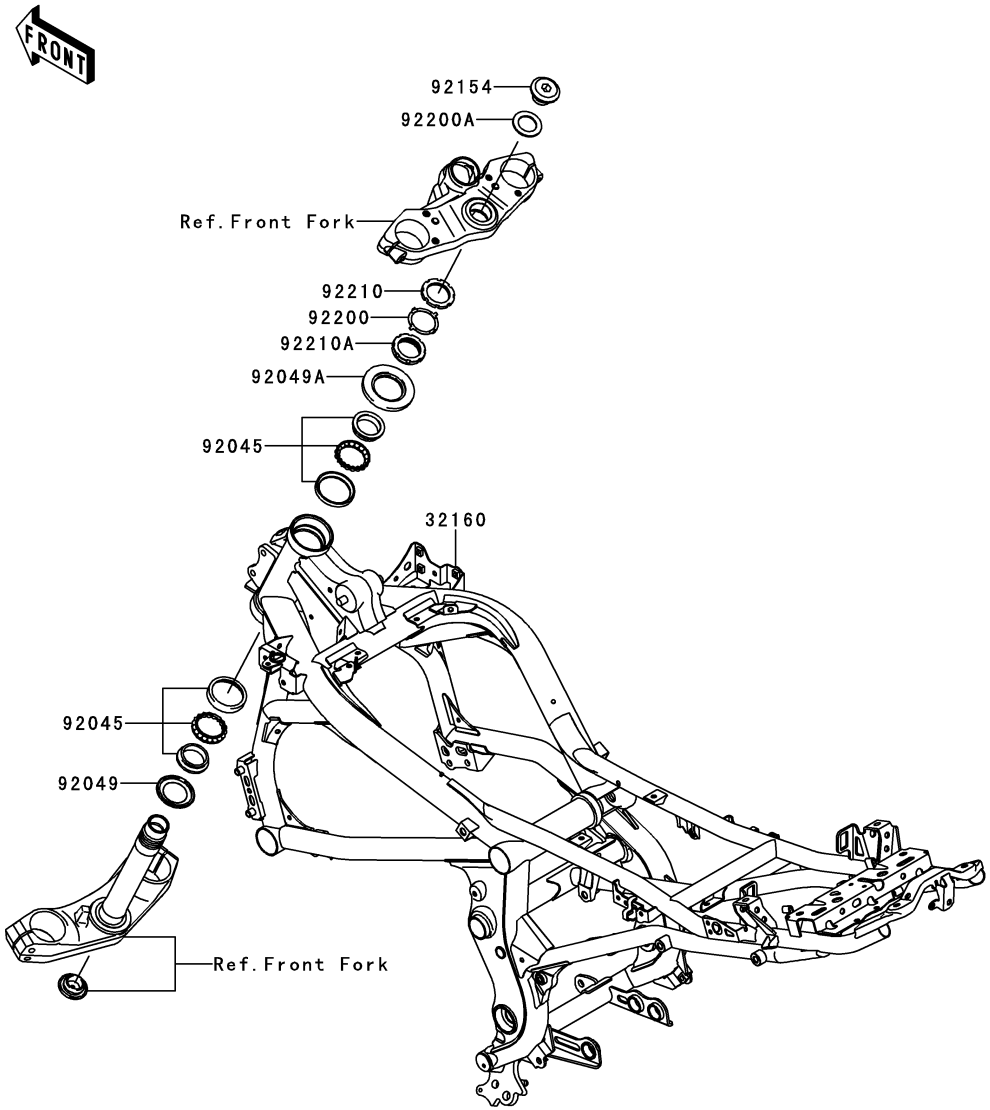

F2120

Ref. No.	Part No.	Description	Spec Code	Quantity-KLE650 ’10 CAF
32160	32160-0435-26M	FRAME-COMP,F.M.GRAY		1
92045	92045-1384	BEARING-BALL,SF07A17PX1V1		2
92049	92049-0022	SEAL-OIL,DS35X55X4		1
92049A	92049-1483	SEAL-OIL,MX043N2		1
92154	92154-0290	BOLT,SOCKET,26X18		1
92200	92200-0281	WASHER		1
92200A	92200-0537	WASHER,27X42X2.3		1
92210	92210-0578	NUT,STEERING STEM,35MM		1
92210A	92210-0579	NUT,STEERING STEM,35MM		1

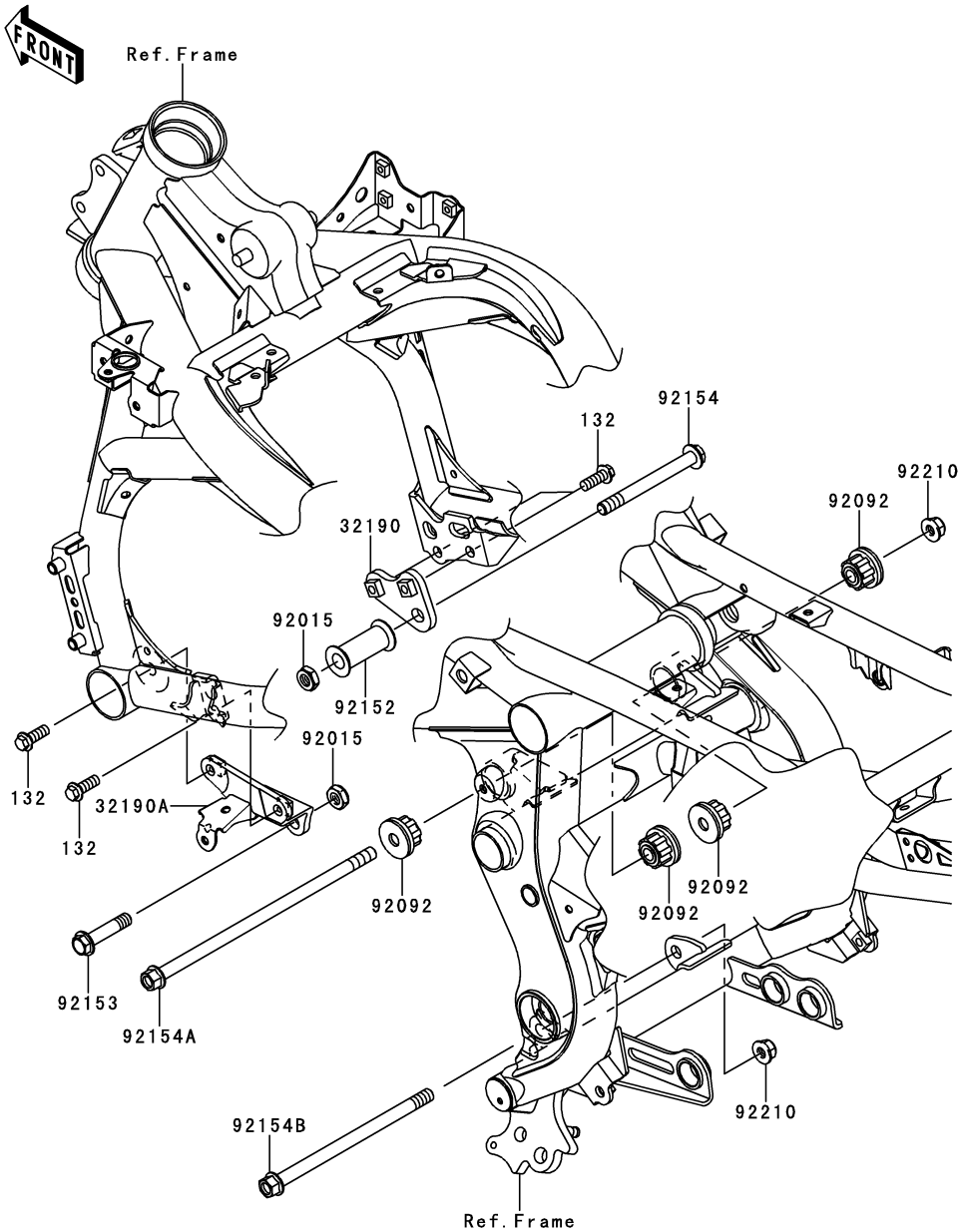

Ref. No.	Part No.	Description	Spec Code	Quantity-KLE650 ’10 CAF
32190	32190-0189	BRACKET-ENGINE,RH		1
32190A	32190-0470	BRACKET-ENGINE,LH		1
92015	92015-1188	NUT,LOCK,10MM,BLACK		2
92092	92092-0021	BUSHING-RUBBER		4
92152	92152-0740	COLLAR,11X26X50.8		1
92153	92153-0823	BOLT,FLANGED,10X47		1
92154	92154-0083	BOLT,FLANGED,10X100		1
92154A	92154-0138	BOLT,FLANGED,10X237		1
92154B	92154-0373	BOLT,FLANGED,10X170		1
92210	92210-1081	NUT,LOCK,FLANGED,10MM		2
132	132BA0822	BOLT-FLANGED-SMALL,8X22		4

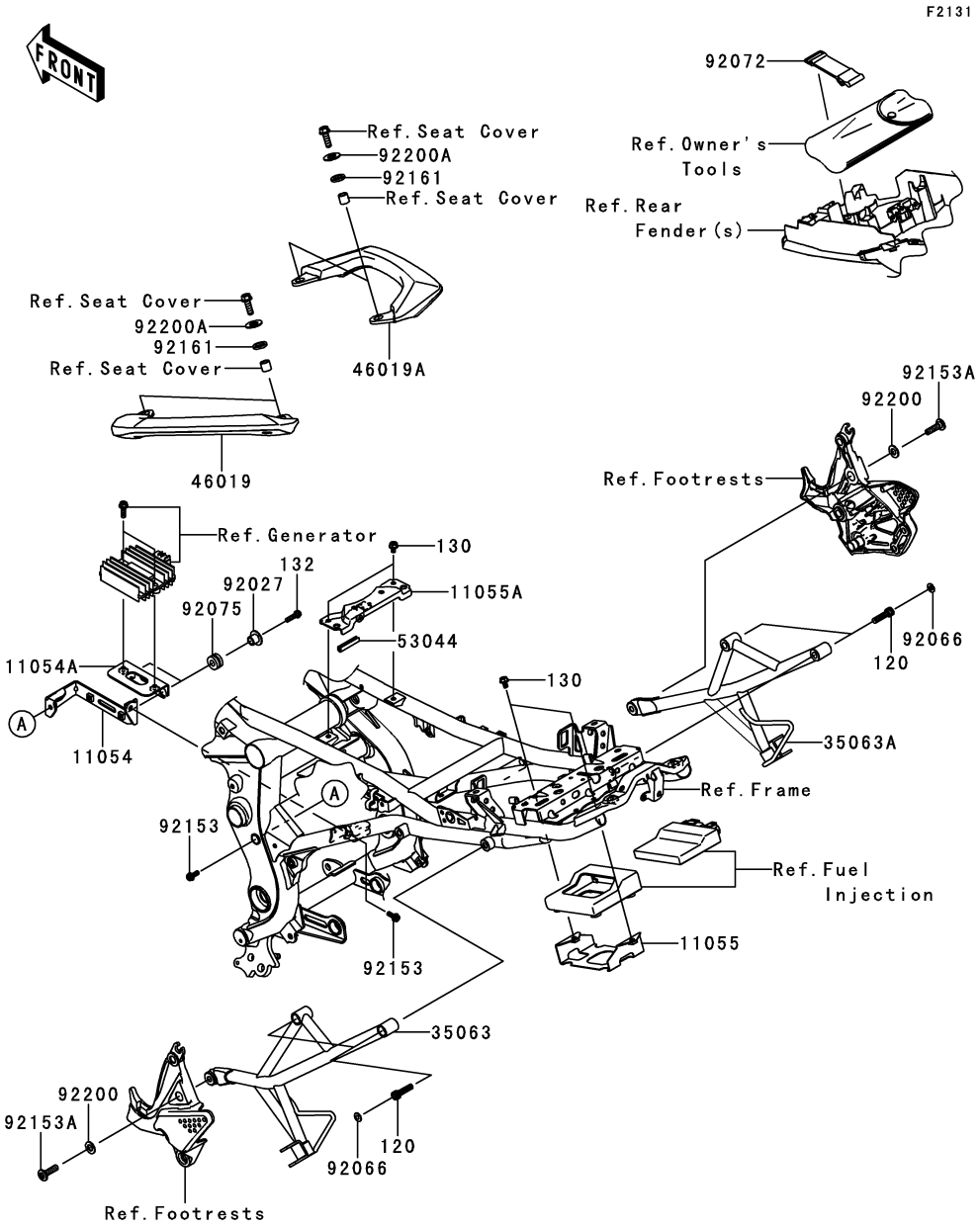

Ref. No.	Part No.	Description	Spec Code	Quantity-KLE650 '10 CAF
11054	11054-1283	BRACKET,REGULATOR		1
11054A	11054-1284	BRACKET,REGULATOR		1
11055	11055-1872	BRACKET,ECU		1
11055A	11055-1929	BRACKET,FUEL TANK		1
35063	35063-0478-26M	STAY,STEP,RR,LH,F.M.GRAY		1
35063A	35063-0479-26M	STAY,STEP,RR,RH,F.M.GRAY		1
46019	46019-0030	GRIP-ASSY,LH		1
46019A	46019-0031	GRIP-ASSY,RH		1
53044	53044-1174	TRIM,L=40		1
92027	92027-1450	COLLAR,L=13.1,BLACK		2
92066	92066-1216	PLUG		4
92072	92072-1176	BAND,TOOL		1
92075	92075-209	DAMPER		2
92153	92153-1517	BOLT,SOCKET,6X16		2
92153A	92153-1630	BOLT,SOCKET,8X30		2
92161	92161-0867	DAMPER,14X22X3		4
92200	92200-0328	WASHER,10.2X20X1.6		2
92200A	92200-0568	WASHER,8.2X26X3.2		4
120	120CA0830	BOLT-SOCKET,8X30		4
130	130BA0610	BOLT-FLANGED,6X10		4
132	132BB0622	BOLT-FLANGED-SMALL,6X22		2

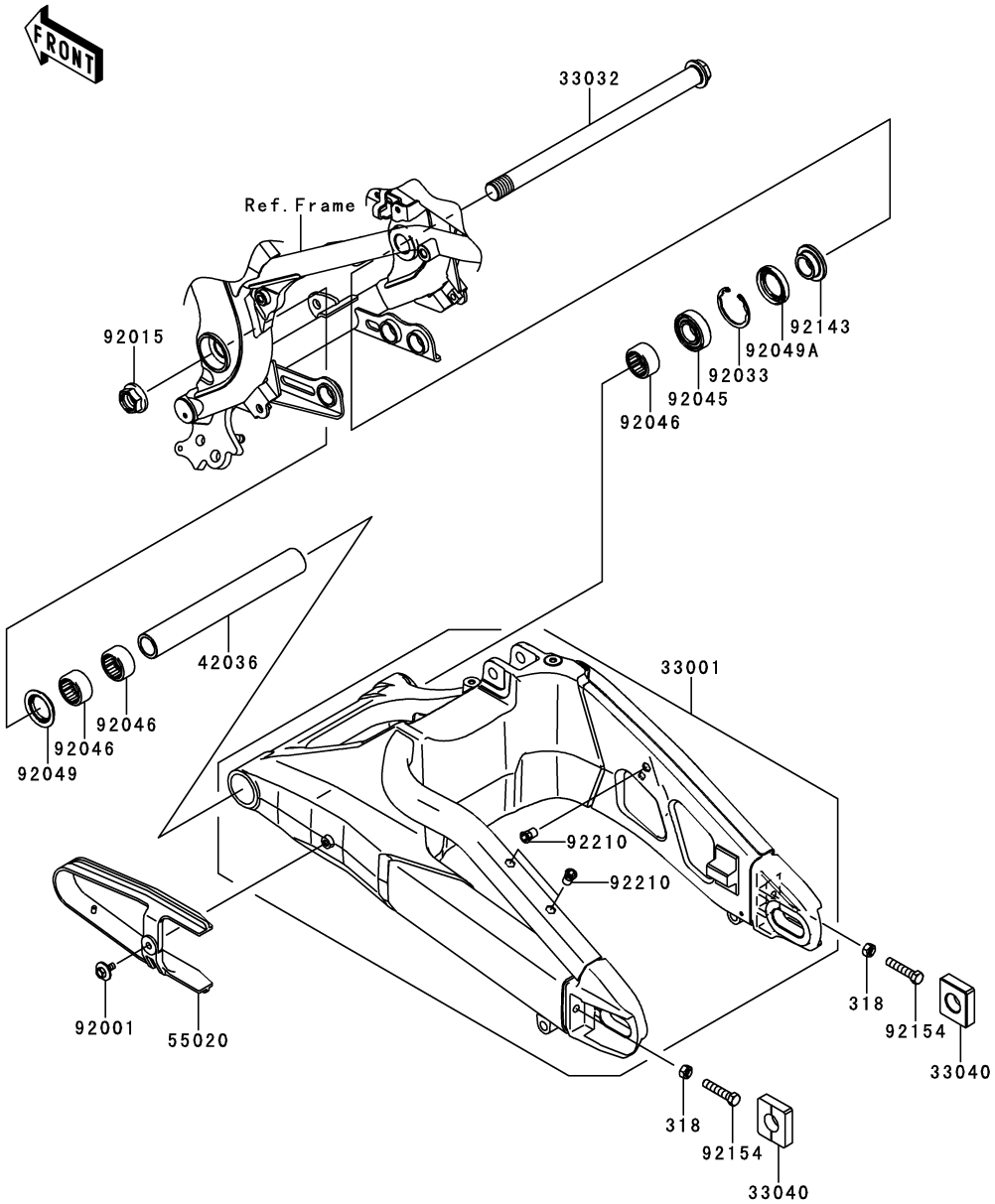

Ref. No.	Part No.	Description	Spec Code	Quantity-KLE650 ’10 CAF
33001	33001-0209-458	ARM-COMP-SWING,P.SILVER		1
33032	33032-1142	SHAFT-SWING ARM		1
33040	33040-1109	ADJUSTER-CHAIN		2
42036	42036-1358	SLEEVE,SWING ARM,L=219.5		1
55020	55020-0234	GUARD,CHAIN		1
92001	92001-1950	BOLT,6X16		1
92015	92015-1724	NUT,FLANGED,20MM		1
92033	92033-1041	RING-SNAP,42MM		1
92045	92045-0017	BEARING-BALL,6004UL11		1
92046	92046-0008	BEARING-NEEDLE,7E-HVS 28X34X17		3
92049	92049-1181	SEAL-OIL		1
92049A	92049-1185	SEAL-OIL,TC28426.5		1
92143	92143-1727	COLLAR,SWING ARM,RH,L=12.5		1
92154	92154-0288	BOLT,8X40		2
92210	92210-1397	NUT,POP,6MM,L=15		3
318	318BA0800	NUT-HEX-SMALL,8MM		2

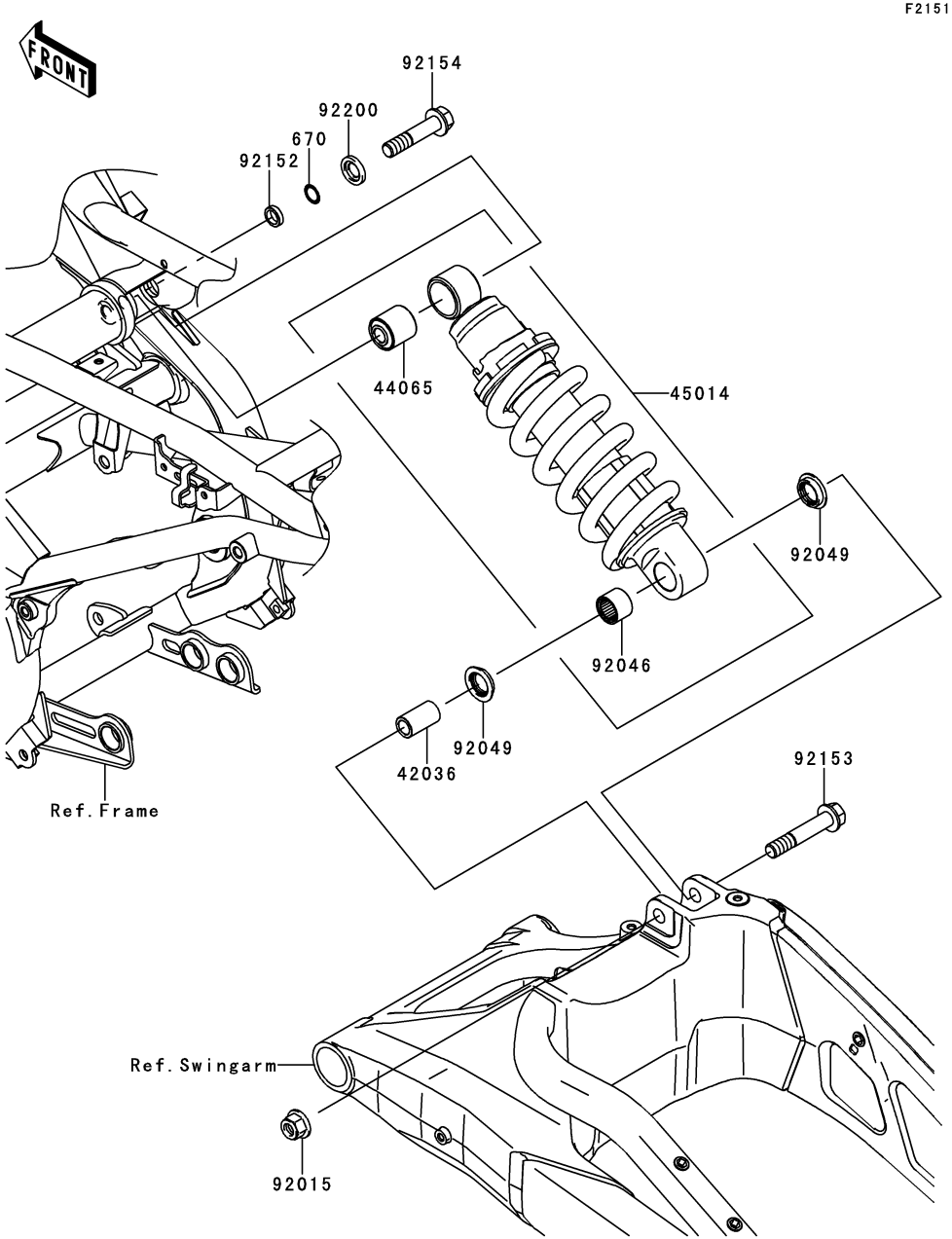

Ref. No.	Part No.	Description	Spec Code	Quantity-KLE650 ’10 CAF				
42036	42036-0024	SLEEVE,12.1X18X32		1				
44065	44065-1017	BUSHING,SHOCKABSORBER		1				
45014	45014-0147-458	SHOCKABSORBER,P.SILVER		1				
92015	92015-1433	NUT,LOCK,FLANGED,12MM		1				
92046	92046-1272	BEARING-NEEDLE,SFYZM182417		1				
92049	92049-1493	SEAL-OIL,KCR MF018N1		2				
92152	92152-0811	COLLAR,12.1X16.8X4.4		1				
92153	92153-1767	BOLT,FLANGED,12X65		1				
92154	92154-0289	BOLT,FLANGED,12X55		1				
92200	92200-0519	WASHER,12.5X24X3.2		1				
670	670B2012	O RING,12MM		1				

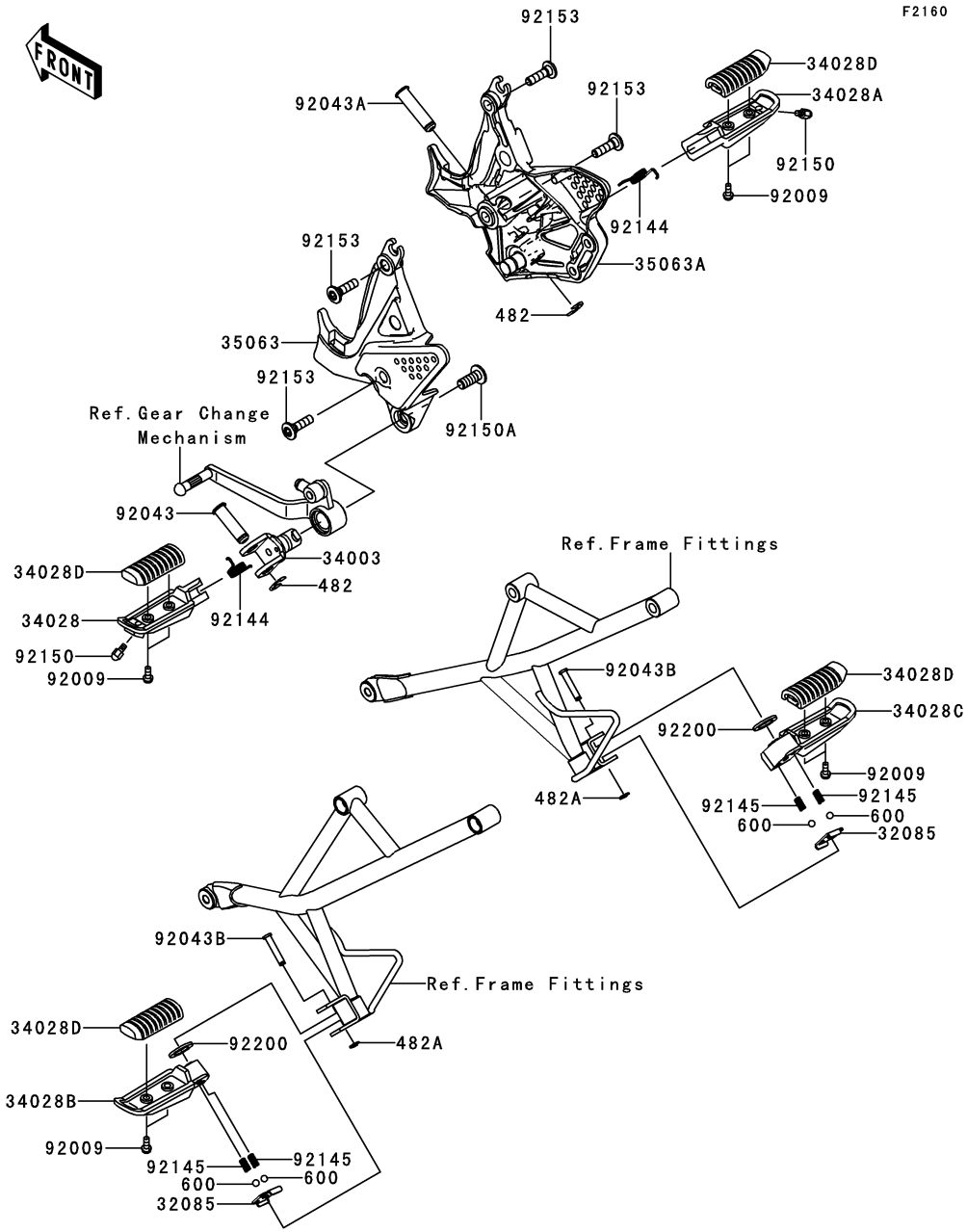

Ref. No.	Part No.	Description	Spec Code	Quantity-KLE650 '10 CAF
32085	32085-0047	STOPPER,REAR STEP		2
34003	34003-1474	HOLDER-STEP,FR,LH		1
34028	34028-0127	STEP,FR,LH		1
34028A	34028-0128	STEP,FR,RH		1
34028B	34028-0129	STEP,RR,LH		1
34028C	34028-0130	STEP,RR,RH		1
34028D	34028-0133	STEP,RUBBER		4
35063	35063-0310-458	STAY,STEP,FR,LH,P.SILVER		1
35063A	35063-0401-458	STAY,STEP,FR,RH,P.SILVER		1
92009	92009-1404	SCREW,5X14		8
92043	92043-0150	PIN,12X37		1
92043A	92043-1145	PIN,12X42.5		1
92043B	92043-1271	PIN,6X34		2
92144	92144-1567	SPRING,STEP RETURN		2
92145	92145-1319	SPRING		4
92150	92150-1114	BOLT,BANK SENSOR		2
92150A	92150-1268	BOLT,SOCKET,10X25		1
92153	92153-1630	BOLT,SOCKET,8X30		4
92200	92200-0043	WASHER,16X26X2.3		2
482	482EA0100	CIRCLIP-TYPE-E,10MM		2
482A	482EA5000	CIRCLIP-TYPE-E		2
600	600A0800	BALL-STEEL,1/4"		4

GRID NO. **E-9**

This grid covers:
Front Fender(s)

F2171

Ref. No.	Part No.	Description	Spec Code	Quantity-KLE650				
				’10				
				CAF				
35004	35004-0137-10A	FENDER-FRONT,P.S.YELLOW		1				
35004A	35004-0137-660	FENDER-FRONT,M.S.BLACK		1				
92151	92151-1654	BOLT,SOCKET,6X14		4				
92200	92200-1388	WASHER,6.5X14X1		4				

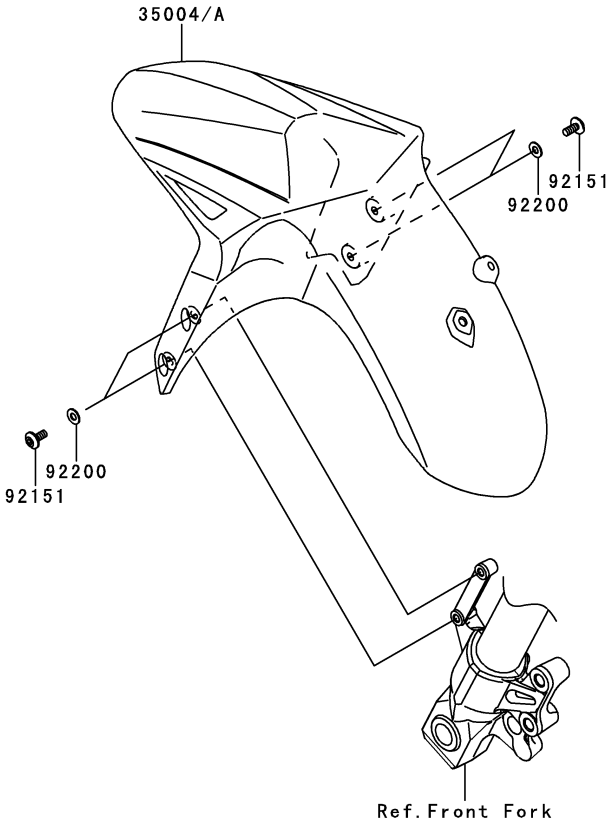

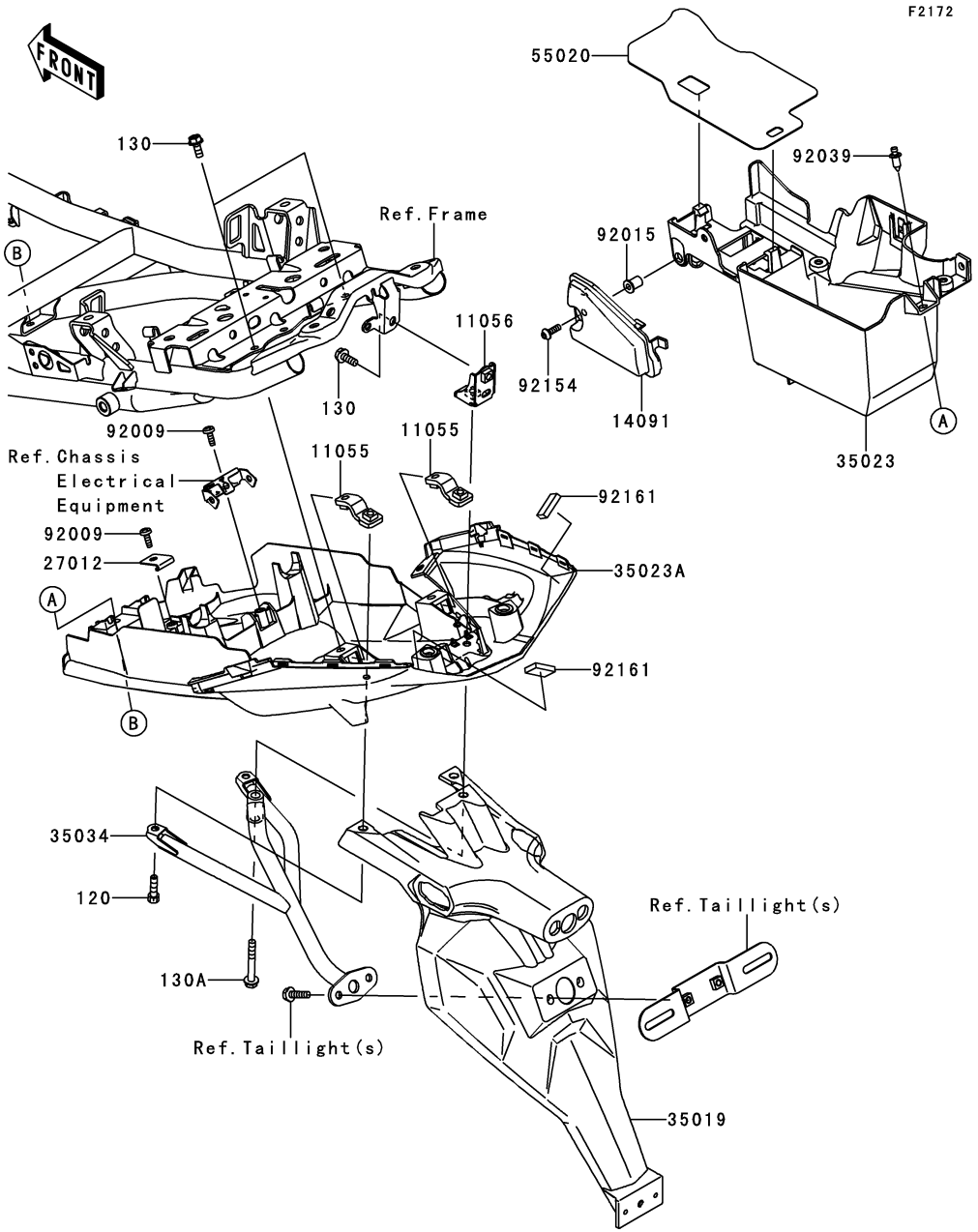

Ref. No.	Part No.	Description	Spec Code	Quantity-KLE650 '10 CAF
11055	11055-1873	BRACKET,FLAP,RR,L&R		2
11056	11056-0236	BRACKET,FLAP,RR,CNT		1
14091	14091-0715	COVER,SWITCH MAINTENANCE		1
27012	27012-1316	HOOK,BATTERY CASE		1
35019	35019-0102	FLAP,RR FENDER		1
35023	35023-0163	FENDER-REAR,FR		1
35023A	35023-0196	FENDER-REAR,RR		1
35034	35034-0116	REINFORCE		1
55020	55020-0555	GUARD,HEAT		1
92009	92009-3845	SCREW,6X14		2
92015	92015-1757	NUT,WELL,5MM		1
92039	92039-1283	RIVET		1
92154	92154-0209	BOLT,SOCKET,5X16		1
92161	92161-0717	DAMPER		2
120	120CA0622	BOLT-SOCKET,6X22		2
130	130BA0616	BOLT-FLANGED,6X16		3
130A	130BB0645	BOLT-FLANGED,6X45		1

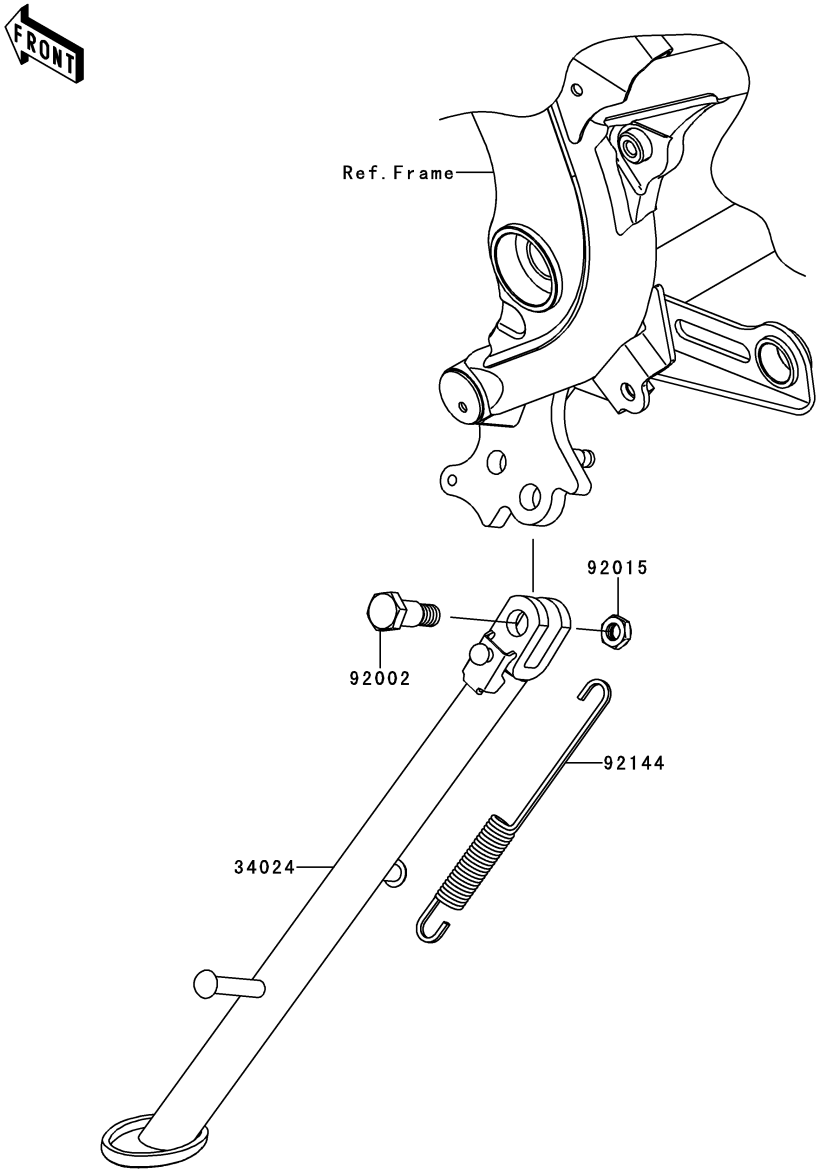

Ref. No.	Part No.	Description	Spec Code	Quantity-KLE650 ’10 CAF
34024	34024-0081	STAND-SIDE		1
92002	92002-1935	BOLT,SIDE STAND		1
92015	92015-1188	NUT,LOCK,10MM,BLACK		1
92144	92144-1818	SPRING,SIDE STAND		1

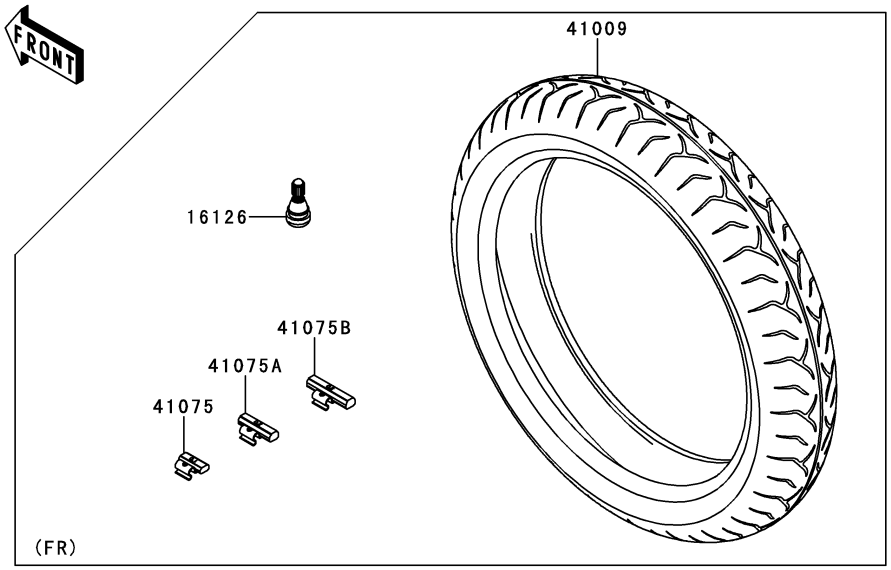

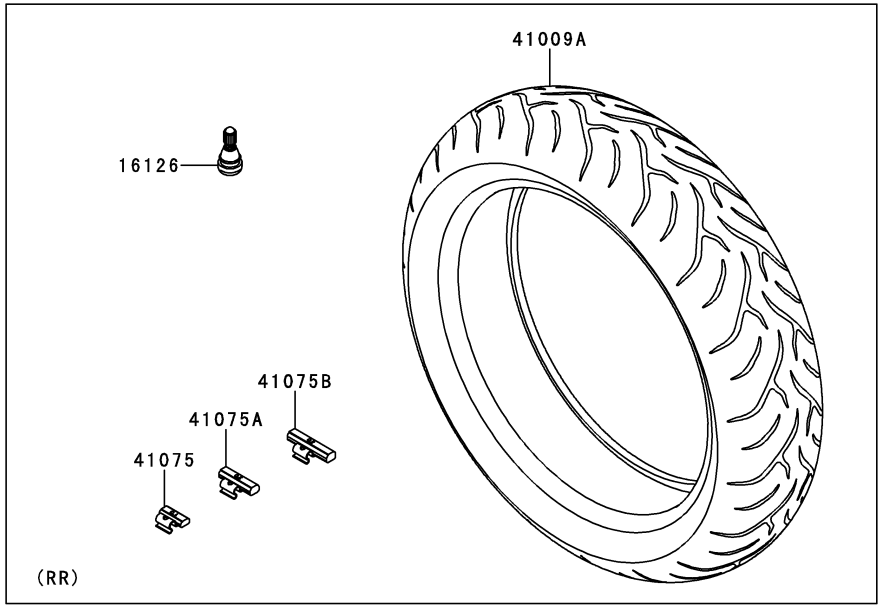

F2210

Ref. No.	Part No.	Description	Spec Code	Quantity-KLE650 '10 CAF
16126	16126-1140	VALVE,TIRE		2
41009	41009-0128	TIRE,FR,120/70ZR17(58W),D221FA		1
41009A	41009-0129	TIRE,RR,160/60ZR17(69W),D221G		1
41075	41075-0007	BALANCER-WHEEL,10G,SILVER		AR
41075A	41075-0008	BALANCER-WHEEL,20G,SILVER		AR
41075B	41075-0009	BALANCER-WHEEL,30G,SILVER		AR

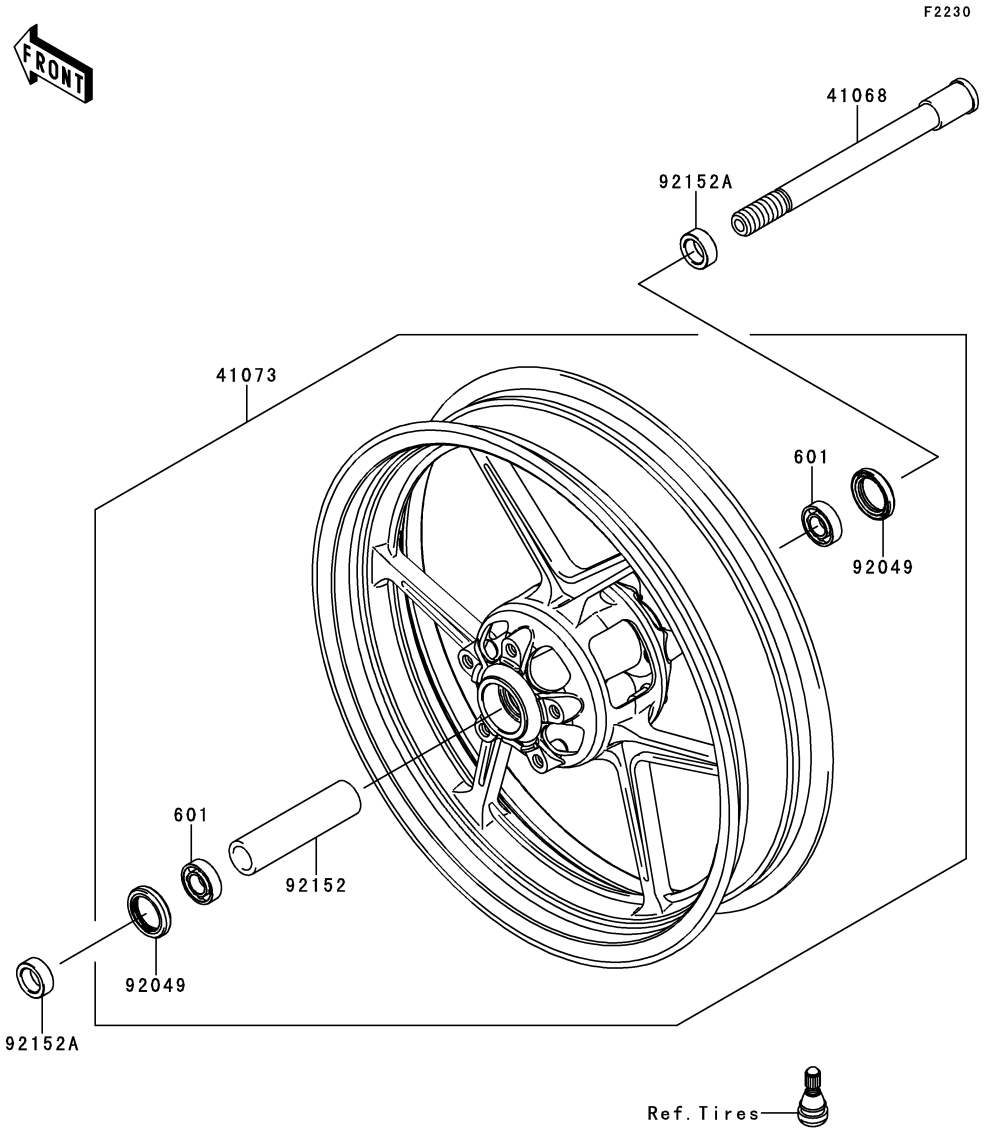

Ref. No.	Part No.	Description	Spec Code	Quantity-KLE650 ’10 CAF
41068	41068-0038	AXLE,FR		1
41073	41073-0053-R2	WHEEL-ASSY,FR,BLACK		1
92049	92049-1057	SEAL-OIL,BJN30427-C3		2
92152	92152-0087	COLLAR,FR HUB,L=115		1
92152A	92152-0828	COLLAR,20X30X11		2
601	601B6004UU	BEARING-BALL,#6004UUC3		2

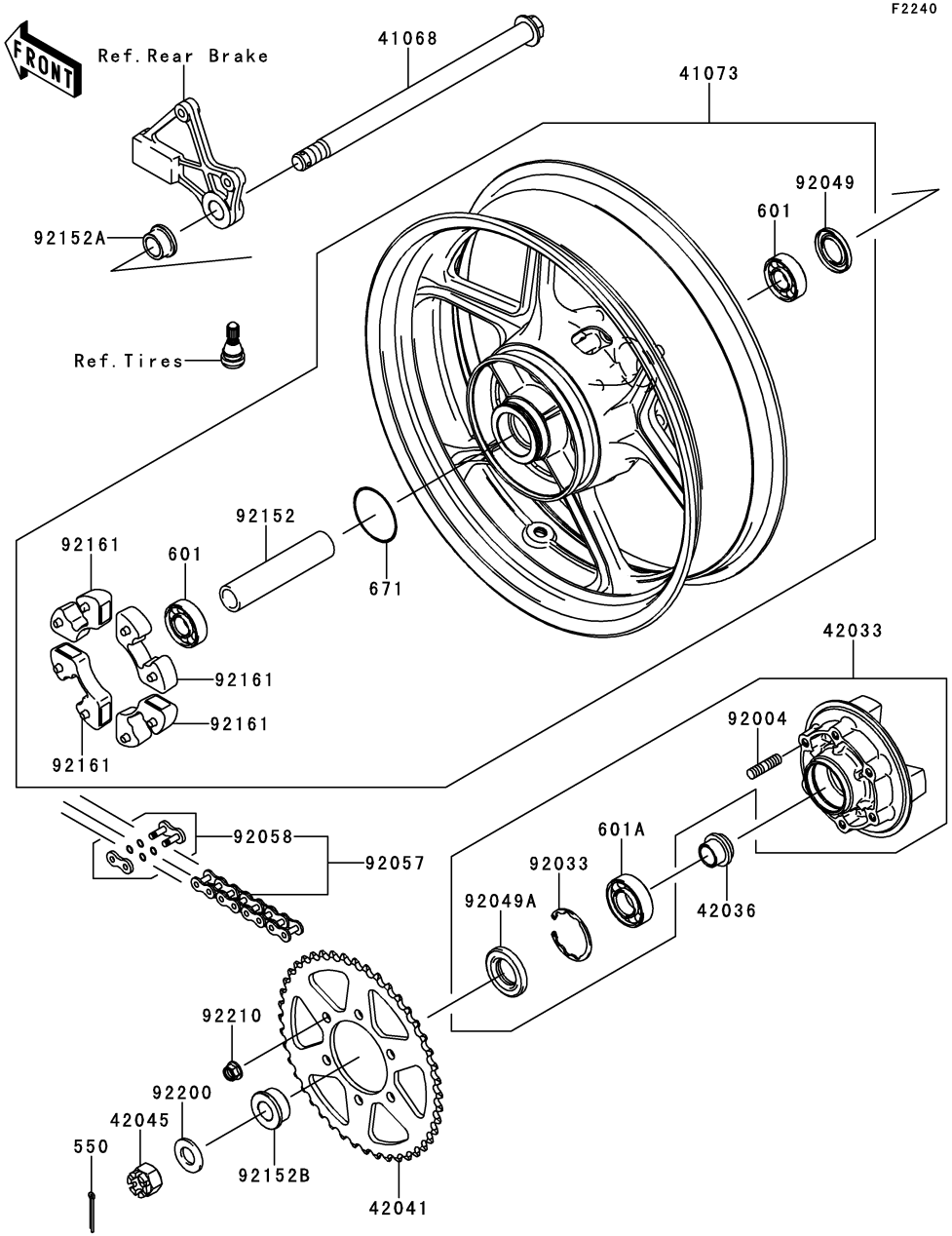

Ref. No.	Part No.	Description	Spec Code	Quantity-KLE650 '10 CAF
41068	41068-0054	AXLE,RR		1
41073	41073-0051-R2	WHEEL-ASSY,RR,BLACK		1
42033	42033-0028	COUPLING-ASSY,RR HUB		1
42036	42036-1251	SLEEVE,RR HUB,L=23		1
42041	42041-0089	SPROCKET-HUB,46T		1
42045	42045-018	NUT,CASTLE,18MM		1
92004	92004-0028	STUD,10X19		6
92033	92033-1043	RING-SNAP,52MM		1
92049	92049-1056	SEAL-OIL,BJN28475		1
92049A	92049-1287	SEAL-OIL		1
92057	92057-0184	CHAIN,DRIVE,EK520MVXL2X114L		1
92058	92058-0021	JOINT-CHAIN,DRIVE		1
92152	92152-0301	COLLAR,RR HUB,L=133		1
92152A	92152-0302	COLLAR,RR AXLE,RH,L=17		1
92152B	92152-0822	COLLAR,RR AXLE,LH,L=18		1
92161	92161-0303	DAMPER,SHOCK,RR HUB		4
92200	92200-0296	WASHER,19X36X3.2		1
92210	92210-0276	NUT,LOCK,FLANGED,10MM		6
550	550AA4035	PIN-COTTER,4.0X35		1
601	601B6204UU	BEARING-BALL,6204UUC3		2
601A	601B6205UU	BEARING-BALL		1
671	671B2560	O RING,60MM		1

F2260

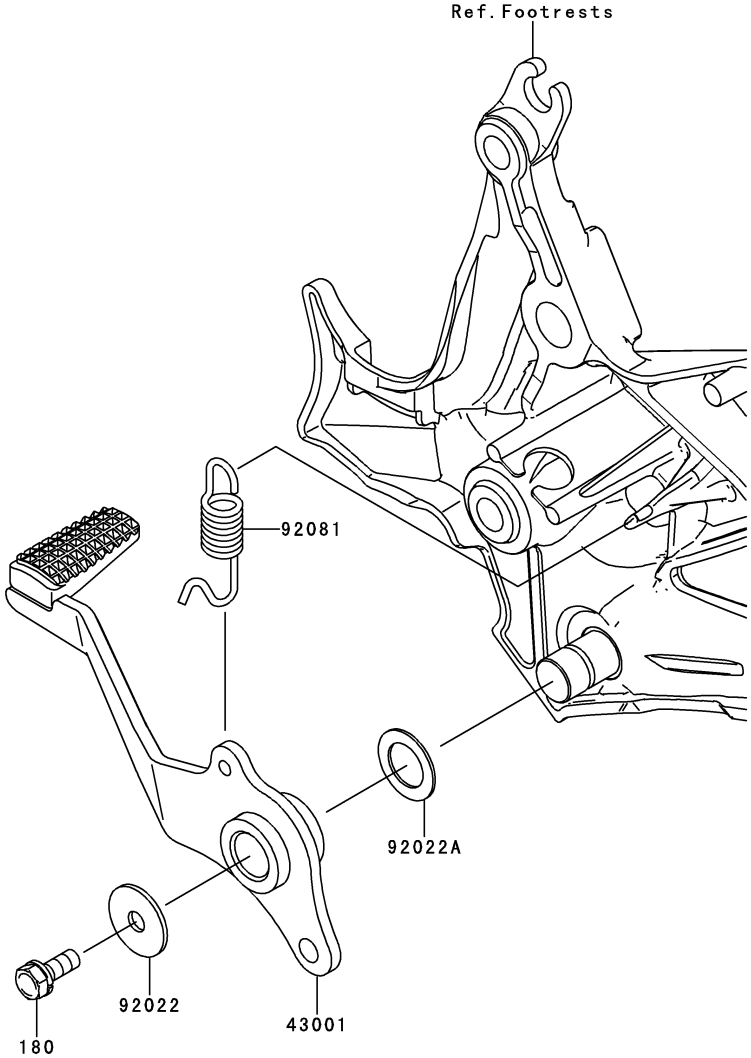

Ref. No.	Part No.	Description	Spec Code	Quantity-KLE650				
				’10				
				CAF				
43001	43001-0128	LEVER-BRAKE,PEDAL		1				
92022	92022-228	WASHER,7X24X1.6		1				
92022A	92022-326	WASHER,15.3X24X1		1				
92081	92081-1833	SPRING,BRAKE PEDAL		1				
180	180AA0616	BOLT-UPSET-WS,6X16		1				

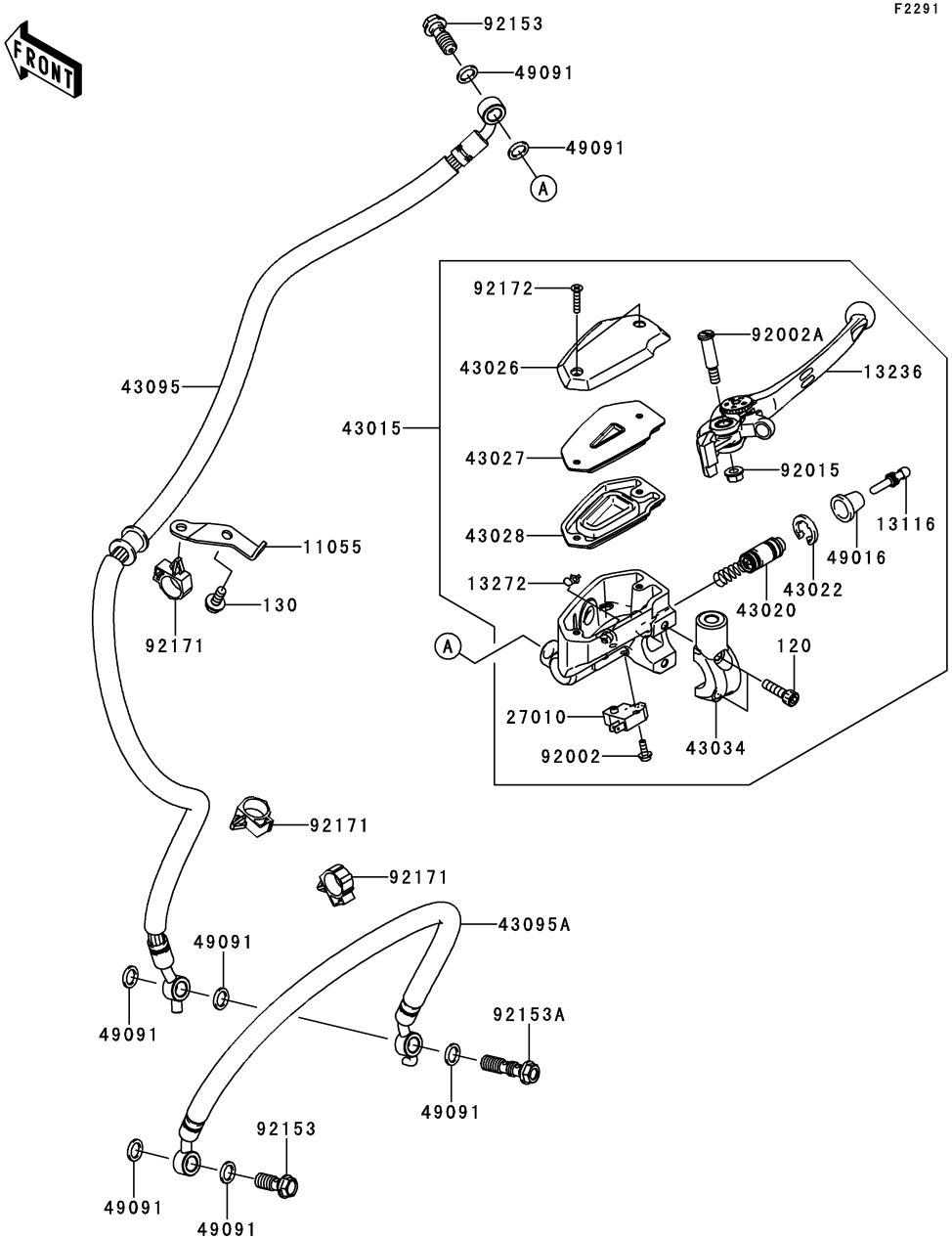

Ref. No.	Part No.	Description	Spec Code	Quantity-KLE650 '10 CAF
11055	11055-1875	BRACKET,BRAKE HOSE		1
13116	13116-0032	ROD-PUSH		1
13236	13236-0169	LEVER-COMP,FRONT BRAKE		1
13272	13272-0573	PLATE		1
27010	27010-0025	SWITCH,BRAKE		1
43015	43015-0116	CYLINDER-ASSY-MASTER,FR		1
43020	43020-0015	PISTON-COMP-BRAKE		1
43022	43022-1010	STOPPER-BRAKE,PISTON		1
43026	43026-0019	CAP-BRAKE		1
43027	43027-0008	PLATE-DIAPHRAGM		1
43028	43028-0015	DIAPHRAGM		1
43034	43034-0049	HOLDER-BRAKE,MASTER CYLINDER		1
43095	43095-0526	HOSE-BRAKE,FR		1
43095A	43095-0527	HOSE-BRAKE,FR		1
49016	49016-1044	COVER-SEAL,MASTER CYLINDER		1
49091	49091-0001	WASHER-SEAL,10.1X14.5X1.5		7
92002	92002-1322	BOLT,LEVER SET,BLACK		1
92002A	92002-1323	BOLT,SCREW,4X12		1
92015	92015-1233	NUT,FLANGED,6MM,BLACK		1
92153	92153-0627	BOLT,OIL,L=23		2
92153A	92153-0628	BOLT,OIL,L=37		1
92171	92171-0316	CLAMP,BRAKE HOSE		3
92172	92172-0320	SCREW,4X20		2
120	120CB0622	BOLT-SOCKET,6X22		2
130	130BA0614	BOLT-FLANGED,6X14		1

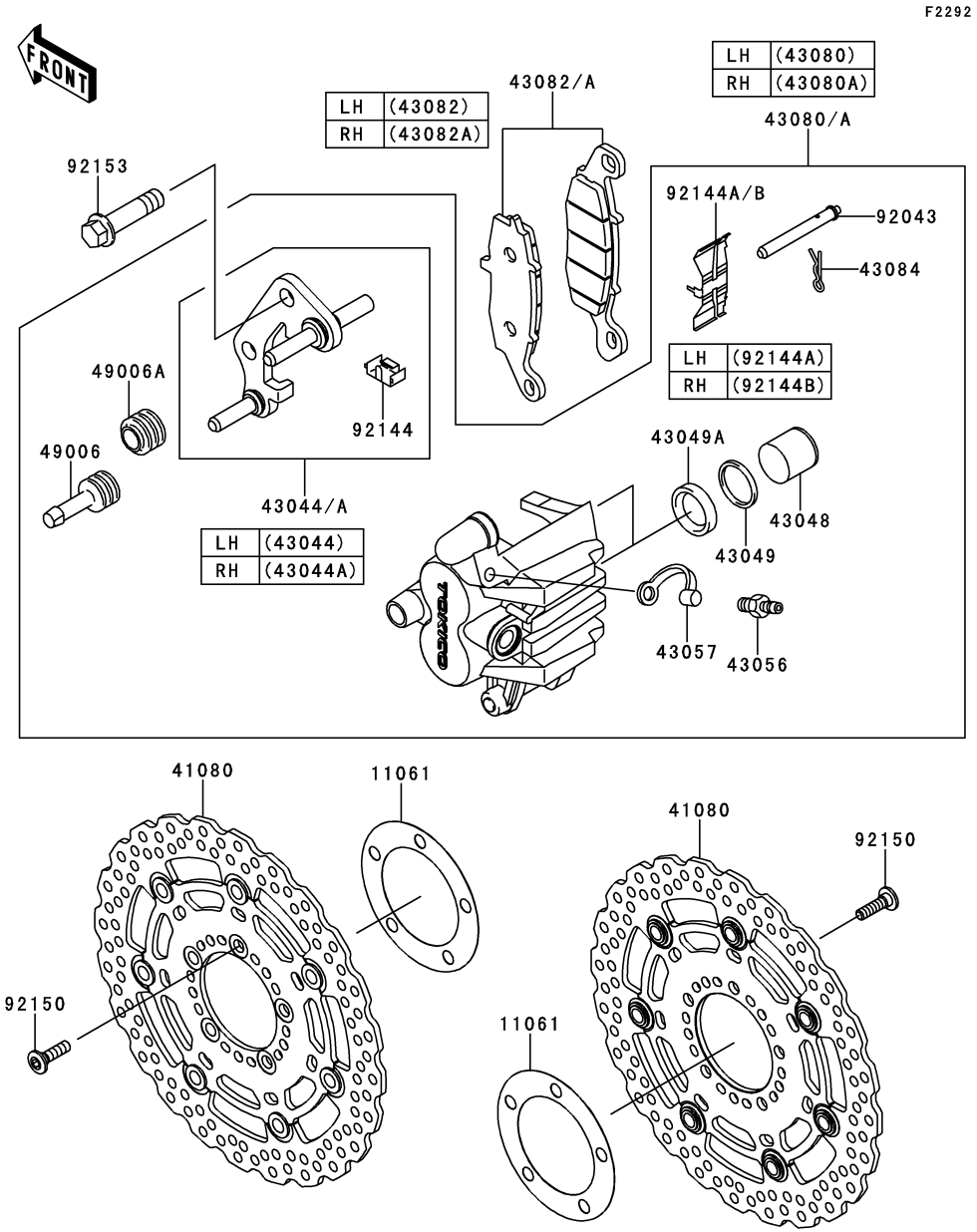

Ref. No.	Part No.	Description	Spec Code	Quantity-KLE650 '10	CAF
11061	11061-0029	GASKET,DISC PLATE		2	
41080	41080-0177-11I	DISC,FR,HOUSING BLK+DISC SIL		2	
43044	43044-1115	HOLDER-COMP-CALIPER,FR,LH		1	
43044A	43044-1116	HOLDER-COMP-CALIPER,FR,RH		1	
43048	43048-1052	PISTON-CALIPER		4	
43049	43049-1055	PACKING,PISTON		4	
43049A	43049-1096	PACKING,PISTON SEAL		4	
43056	43056-1054	BREATHER-BRAKE		2	
43057	43057-003	CAP-BREATHER		2	
43080	43080-0076-DJ	CALIPER-SUB-ASSY,FR,LH,BLACK		1	
43080A	43080-0077-DJ	CALIPER-SUB-ASSY,FR,RH,BLACK		1	
43082	43082-0050	PAD-ASSY-BRAKE,LH		1	
43082A	43082-0051	PAD-ASSY-BRAKE,RH		1	
43084	43084-003	CLAMP,PAD		2	
49006	49006-1054	BOOT,CALIPER		2	
49006A	49006-1095	BOOT,CALIPER		2	
92043	92043-1489	PIN,PAD		2	
92144	92144-1831	SPRING,STOPPER		2	
92144A	92144-1832	SPRING,PAD,LH		1	
92144B	92144-1844	SPRING,PAD,RH		1	
92150	92150-1771	BOLT,SOCKET,8X30		10	
92153	92153-1680	BOLT,FLANGED,10X35		4	

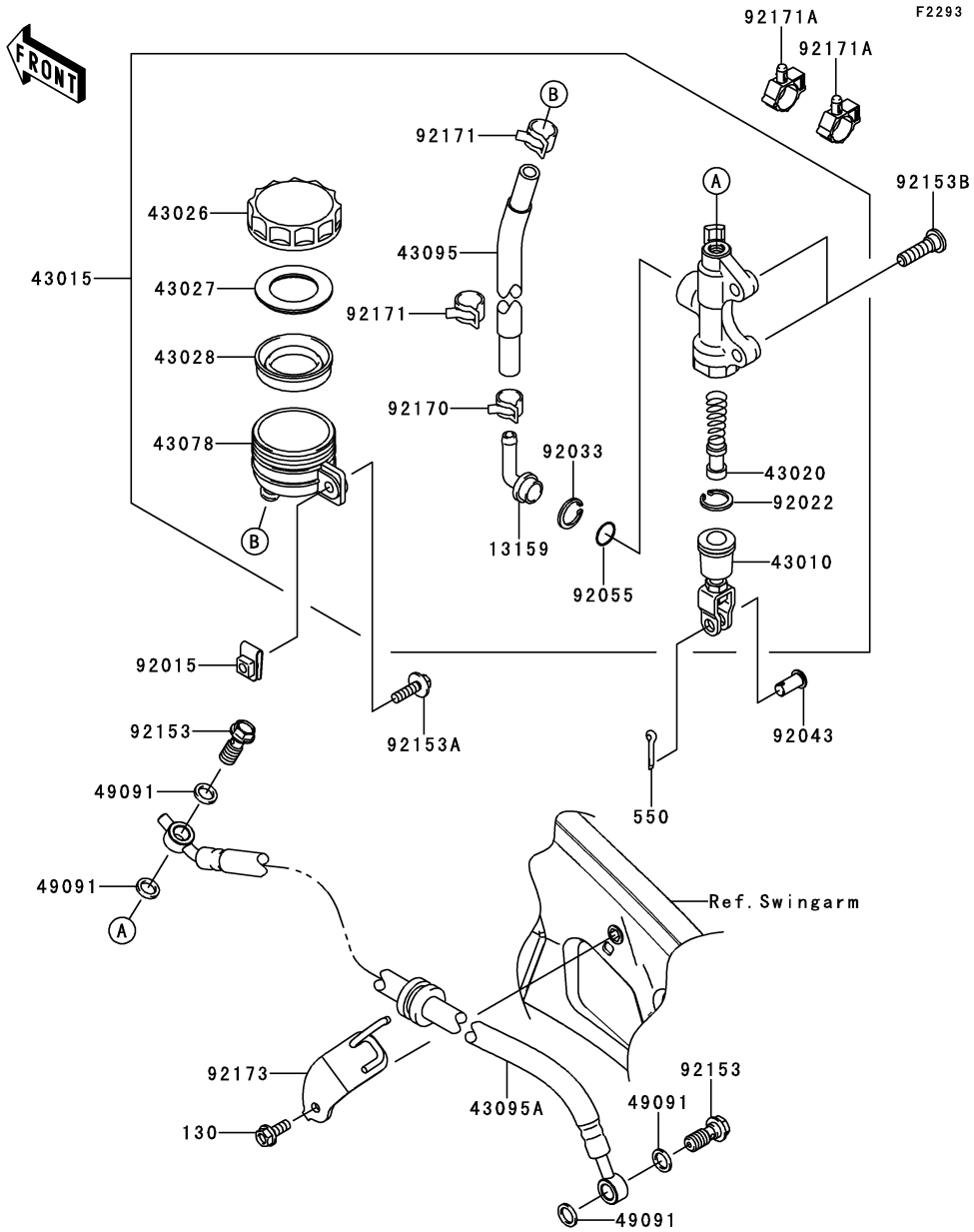

Ref. No.	Part No.	Description	Spec Code	Quantity-KLE650 '10	CAF
13159	13159-1056	CONNECTOR		1	
43010	43010-1074	ROD-ASSY-BRAKE		1	
43015	43015-0068	CYLINDER-ASSY-MASTER,RR		1	
43020	43020-1094	PISTON-COMP-BRAKE		1	
43026	43026-1051	CAP-BRAKE		1	
43027	43027-1051	PLATE-DIAPHRAGM		1	
43028	43028-1057	DIAPHRAGM,MASTER CYLINDER		1	
43078	43078-1082	RESERVOIR,RR MASTER CYLINDER		1	
43095	43095-0193	HOSE-BRAKE,RR MASTER CYLINDER		1	
43095A	43095-0254	HOSE-BRAKE,RR		1	
49091	49091-0001	WASHER-SEAL,10.1X14.5X1.5		4	
92015	92015-1602	NUT,6MM		1	
92022	92022-1601	WASHER,CIRCRIP		1	
92033	92033-1186	RING-SNAP,20.5MM		1	
92043	92043-0104	PIN,8X17		1	
92055	92055-1251	RING-O,MASTER CYLINDER		1	
92153	92153-0627	BOLT,OIL,L=23		2	
92153A	92153-0725	BOLT,6X22		1	
92153B	92153-1624	BOLT,SOCKET,8X30		2	
92170	92170-1091	CLAMP,HOSE		1	
92171	92171-0463	CLAMP,HOSE		2	
92171A	92171-0955	CLAMP		2	
92173	92173-0128	CLAMP,BRAKE HOSE		1	
130	130BA0616	BOLT-FLANGED,6X16		1	
550	550AA2015	PIN-COTTER,2.0X15		1	

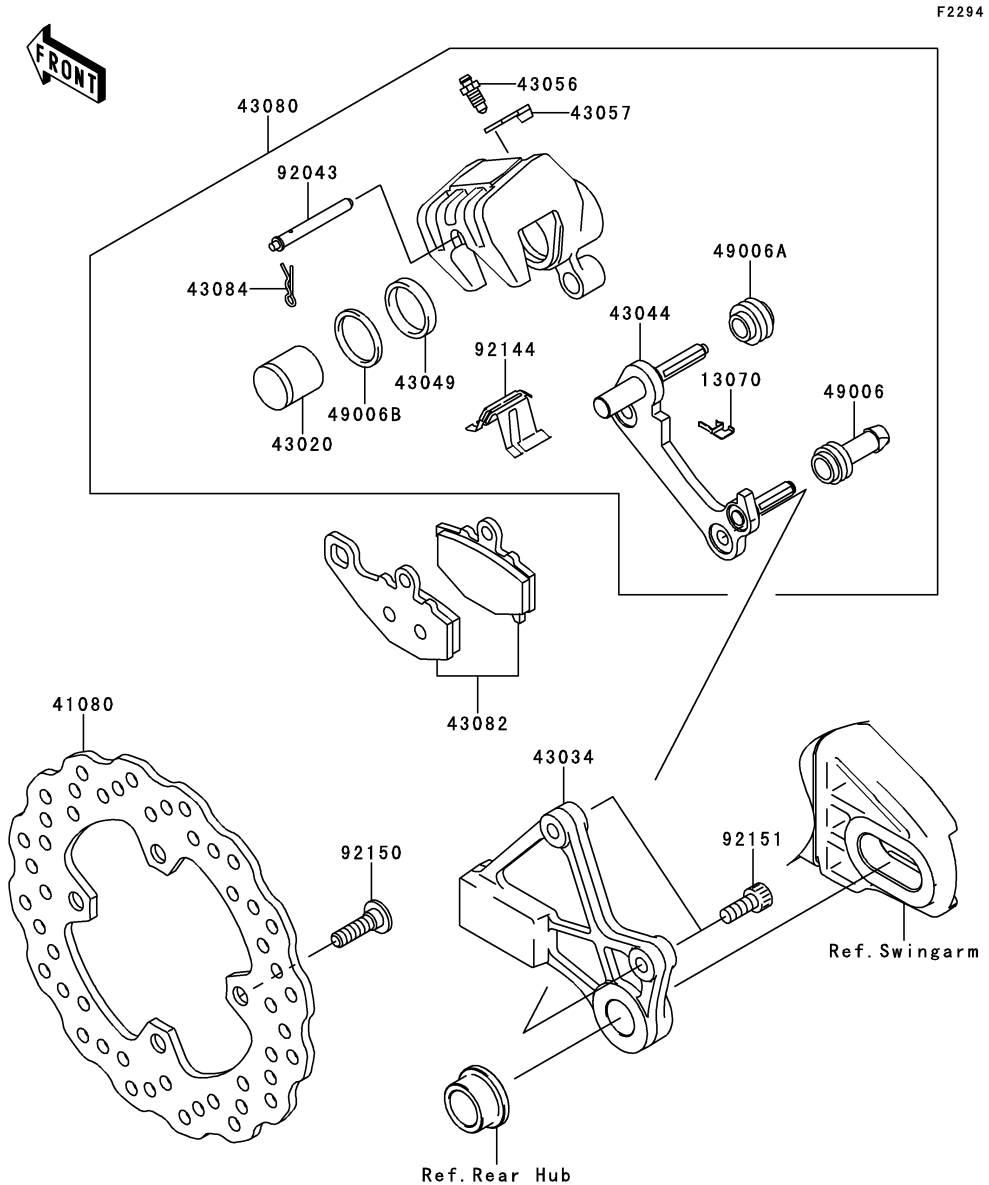

Ref. No.	Part No.	Description	Spec Code	Quantity-KLE650 ’10 CAF
13070	13070-0045	GUIDE,BRAKE PAD		1
41080	41080-0040	DISC,RR		1
43020	43020-1119	PISTON-COMP-BRAKE		1
43034	43034-0037	HOLDER-BRAKE,REAR CALIPER		1
43044	43044-1110	HOLDER-COMP-CALIPER,RR		1
43049	43049-1097	PACKING,PISTON SEAL		1
43056	43056-1054	BREATHER-BRAKE		1
43057	43057-003	CAP-BREATHER		1
43080	43080-0085-DJ	CALIPER-SUB-ASSY,RR,BLACK		1
43082	43082-1213	PAD-ASSY-BRAKE		1
43084	43084-003	CLAMP,PAD		1
49006	49006-1054	BOOT,CALIPER		1
49006A	49006-1095	BOOT,CALIPER		1
49006B	49006-1212	BOOT,PISTON SEAL		1
92043	92043-1489	PIN,PAD		1
92144	92144-1719	SPRING,PAD		1
92150	92150-1771	BOLT,SOCKET,8X30		4
92151	92151-1289	BOLT,SOCKET,8X20		2

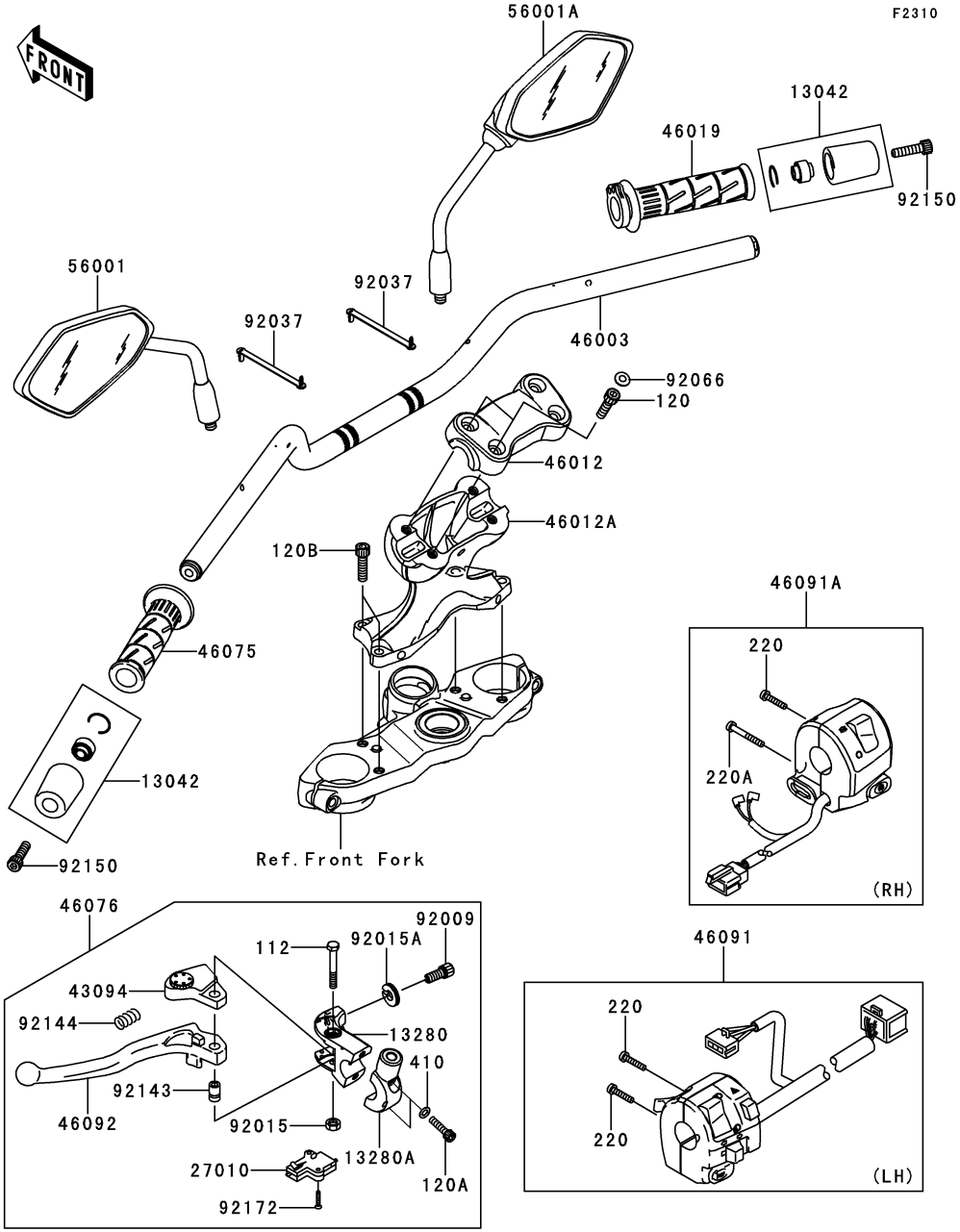

Ref. No.	Part No.	Description	Spec Code	Quantity-KLE650 ’10 CAF
13042	13042-5002	WEIGHT,HANDLE		2
13280	13280-0306	HOLDER,CLUTCH LEVER		1
13280A	13280-0307	HOLDER,CLUTCH LEVER		1
27010	27010-1094	SWITCH,CLUTCH,BLACK		1
43094	43094-1053	ADJUSTER,CLUTCH LEVER		1
46003	46003-0167-10T	HANDLE,F.P.SILVER		1
46012	46012-0029-458	HOLDER-HANDLE,UPP,P.SILVER		1
46012A	46012-0030-458	HOLDER-HANDLE,LWR,P.SILVER		1
46019	46019-0001	GRIP-ASSY,THROTTLE		1
46075	46075-1144	GRIP,LH		1
46076	46076-0052	LEVER-ASSY-GRIP,CLUTCH		1
46091	46091-0216	HOUSING-ASSY-CONTROL,LH		1
46091A	46091-0217	HOUSING-ASSY-CONTROL,RH		1
46092	46092-0031	LEVER-GRIP,CLUTCH		1
56001	56001-0174	MIRROR-ASSY,LH		1
56001A	56001-0175	MIRROR-ASSY,RH		1
92009	92009-1134	SCREW,CABLE ADJUST,8MM,BLACK		1
92015	92015-1191	NUT,LOCK,6MM,BLACK		1
92015A	92015-1197	NUT,CABLE ADJUST LOCK,8MM,BLK		1
92037	92037-1903	CLAMP,SPEED,L=80.5		2
92066	92066-1281	PLUG		4
92143	92143-1379	COLLAR		1
92144	92144-1467	SPRING		1
92150	92150-1604	BOLT,SOCKET,8X30		2
92172	92172-0183	SCREW,3X16		2
112	112AB0645	BOLT-UPSET,6X45		1
120	120CA0830	BOLT-SOCKET,8X30		4
120A	120CB0625	BOLT-SOCKET,6X25		2
120B	120CC0830	BOLT-SOCKET,8X30		4
220	220AB0525	SCREW-PAN-CROS,5X25		3
220A	220AB0540	SCREW-PAN-CROSS,5X40		1
410	410AB0600	WASHER-PLAIN-SMALL,6MM		2

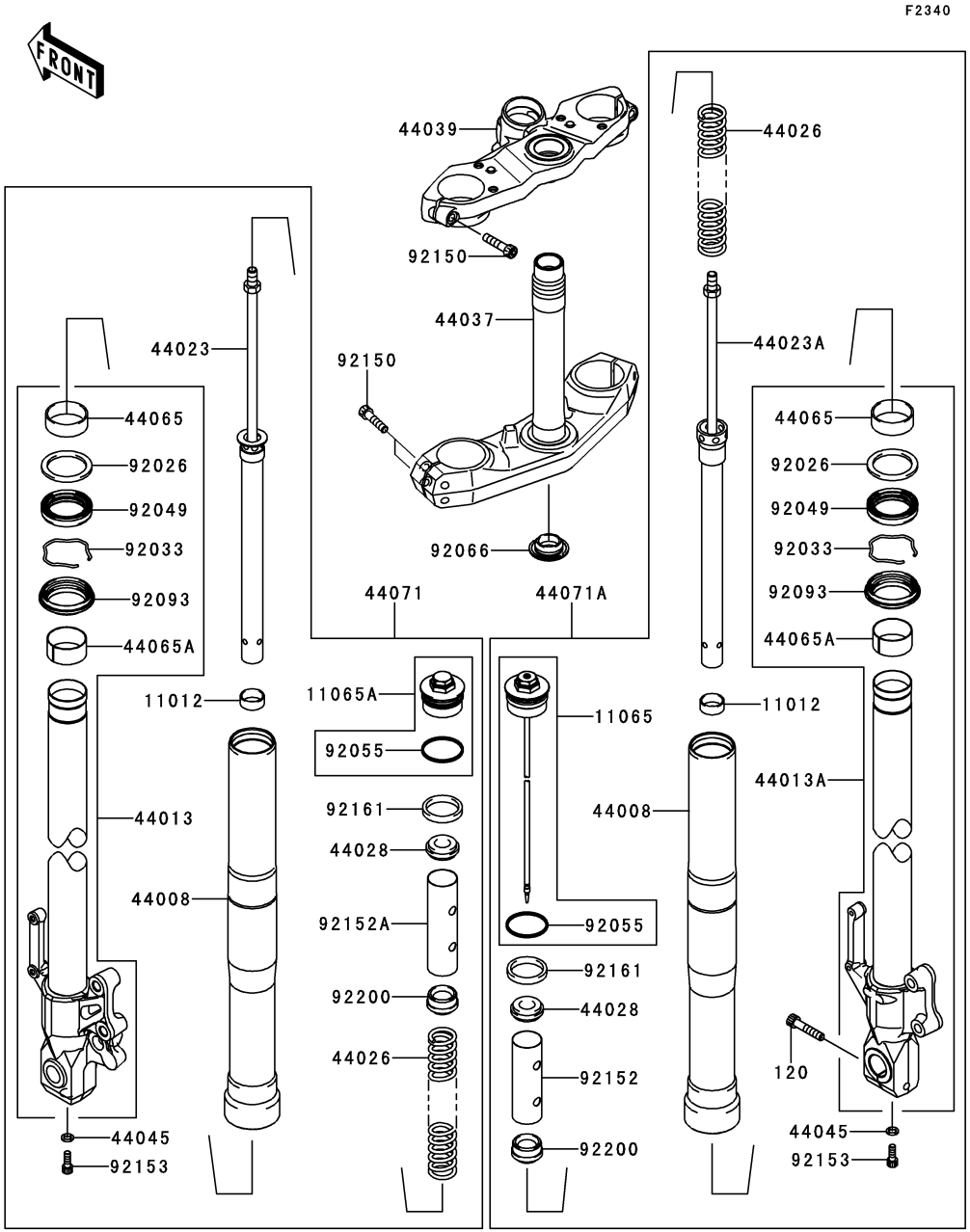

Ref. No.	Part No.	Description	Spec Code	Quantity-KLE650 ’10 CAF				
11012	11012-1761	CAP		2				
11065	11065-0196	CAP,FORK BOLT COMP,RH		1				
11065A	11065-0197	CAP,FORK BOLT COMP,LH		1				
44008	44008-0037-499	PIPE-FORK OUTER,A.BLACK		2				
44013	44013-0156-18R	PIPE-FORK INNER,LH,F.S.BLACK		1				
44013A	44013-0157-18R	PIPE-FORK INNER,RH,F.S.BLACK		1				
44023	44023-0048	CYLINDER-SET-FORK,LH		1				
44023A	44023-0049	CYLINDER-SET-FORK,RH		1				
44026	44026-0097	SPRING-FRONT FORK		2				
44028	44028-1083	GUIDE-FORK SPRING		2				
44037	44037-0053	HOLDER-FORK UNDER		1				
44039	44039-0064-458	HOLDER-FORK UPPER,P.SILVER		1				
44045	44045-051	GASKET,FORK CYLINDER BOLT		2				
44065	44065-0001	BUSHING-FRONT FORK,GUIDE		2				
44065A	44065-0002	BUSHING-FRONT FORK,SLIDE		2				
44071	44071-5111	DAMPER-ASSY,FORK,LH		1				
44071A	44071-5112	DAMPER-ASSY,FORK,RH		1				
92026	92026-1276	SPACER,FORK OUTER		2				
92033	92033-1222	RING-SNAP		2				
92049	92049-0058	SEAL-OIL		2				
92055	92055-0131	RING-O		2				
92066	92066-0032	PLUG		1				
92093	92093-0035	SEAL,DUST		2				
92150	92150-1511	BOLT,SOCKET		6				
92152	92152-0497	COLLAR,FORK,L=100		1				
92152A	92152-0498	COLLAR,FORK,L=117.5		1				
92153	92153-0028	BOLT,SOCKET,8X22		2				
92161	92161-0468	DAMPER		2				
92200	92200-1464	WASHER		2				
120	120CB0840	BOLT-SOCKET,8X40		1				

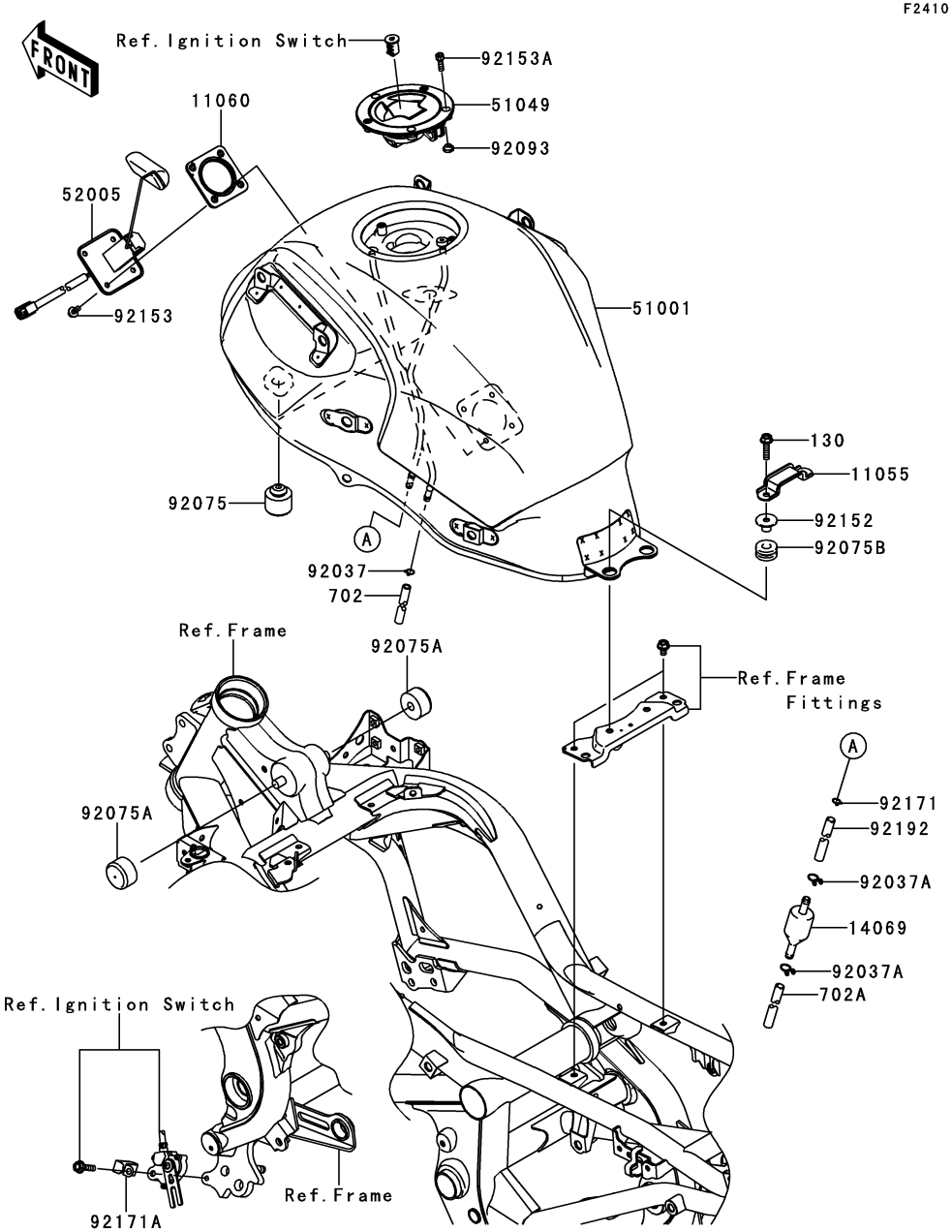

F2410

Ref. No.	Part No.	Description	Spec Code	Quantity-KLE650 '10				
				CAF				
11055	11055-1926	BRACKET,SEAT		1				
11060	11060-1952	GASKET,FUEL GAUGE		1				
14069	14069-1004	BREATHER,FUEL TANK		1				
51001	51001-0332-739	TANK-COMP-FUEL,M.F.S.BLACK		1				
51049	51049-0039	CAP-TANK,FUEL		1				
52005	52005-0023	GAUGE,FUEL		1				
92037	92037-010	CLAMP,TUBE		1				
92037A	92037-147	CLAMP,TUBE		2				
92075	92075-1002	DAMPER		2				
92075A	92075-125	DAMPER,FUEL TANK		2				
92075B	92075-1690	DAMPER		2				
92093	92093-1030	SEAL,FUEL TANK CAP		1				
92152	92152-0365	COLLAR		2				
92153	92153-1421	BOLT,FLANGED,5X12		4				
92153A	92153-1616	BOLT,SOCKET,5X16		3				
92171	92171-0573	CLAMP		1				
92171A	92171-0911	CLAMP		1				
92192	92192-0828	TUBE,BREATHER		1				
130	130BA0625	BOLT-FLANGED,6X25		2				
702	702A06750	TUBE-RUBBER,6X9X750		1				
702A	702A07100	TUBE-RUBBER,7X10X100		1				

F2510

Ref. No.	Part No.	Description	Spec Code	Quantity-KLE650				
				’10				
				CAF				
53003	53003-0112-MA	LEATHER,SEAT,BLACK		1				
53066	53066-0296-MA	SEAT-ASSY,DUAL,BLACK		1				
92075	92075-1045	DAMPER		1				
92161	92161-1321	DAMPER,SEAT		1				

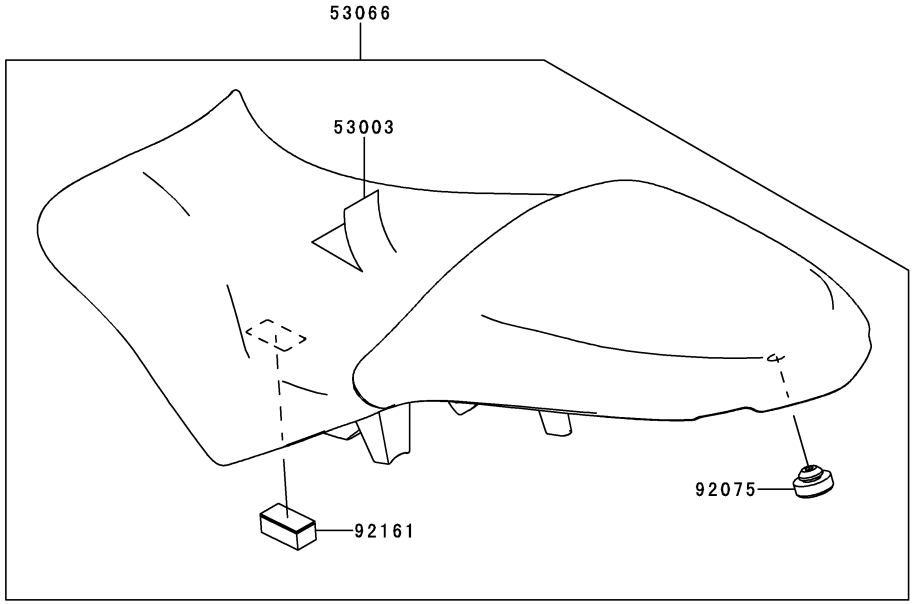

F2530

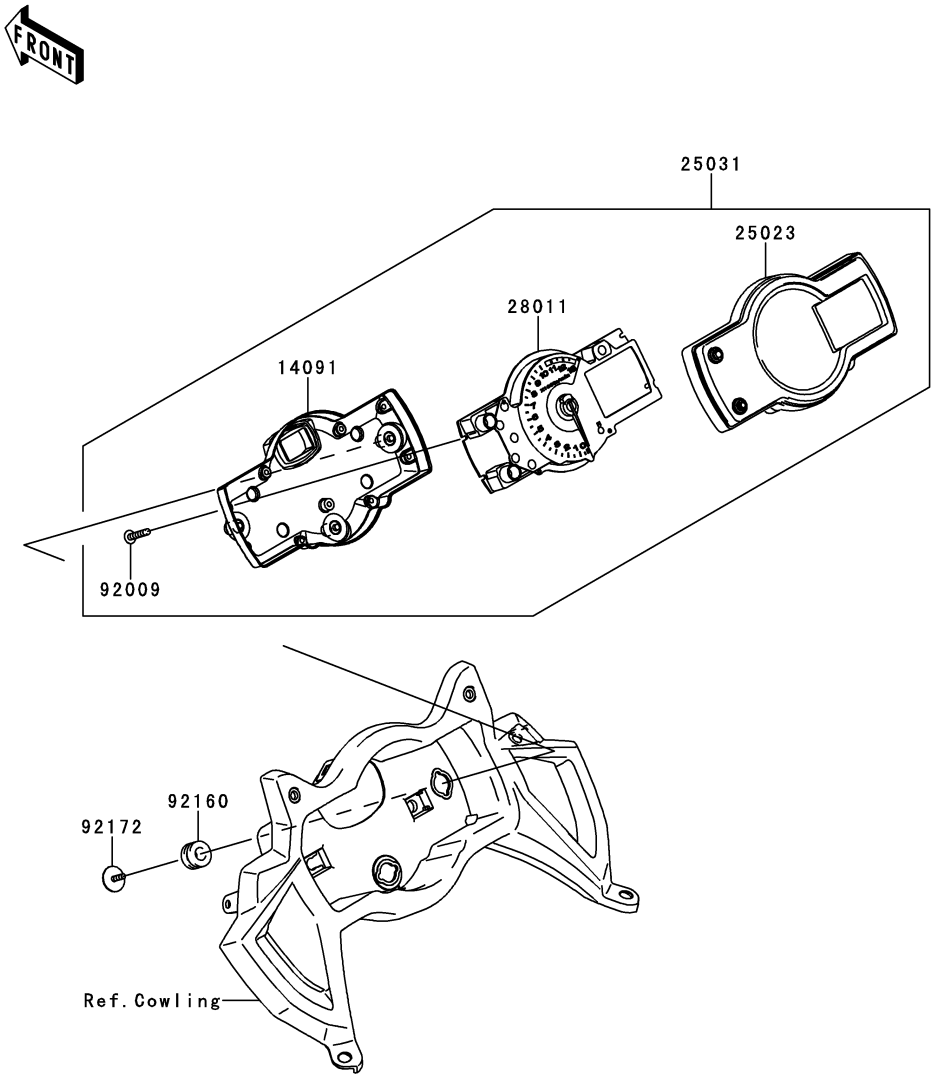

Ref. No.	Part No.	Description	Spec Code	Quantity-KLE650				
				’10				
				CAF				
14091	14091-0864	COVER,METER,LWR		1				
25023	25023-0023	COVER-METER CASE,UPP		1				
25031	25031-0347	METER-ASSY,TACHO&LCD		1				
28011	28011-0175	METER,TACHO&LCD		1				
92009	92009-1164	SCREW,TAPPING,3X16		9				
92160	92160-1167	DAMPER		3				
92172	92172-0441	SCREW,TAPPING,WP,5X14		3				

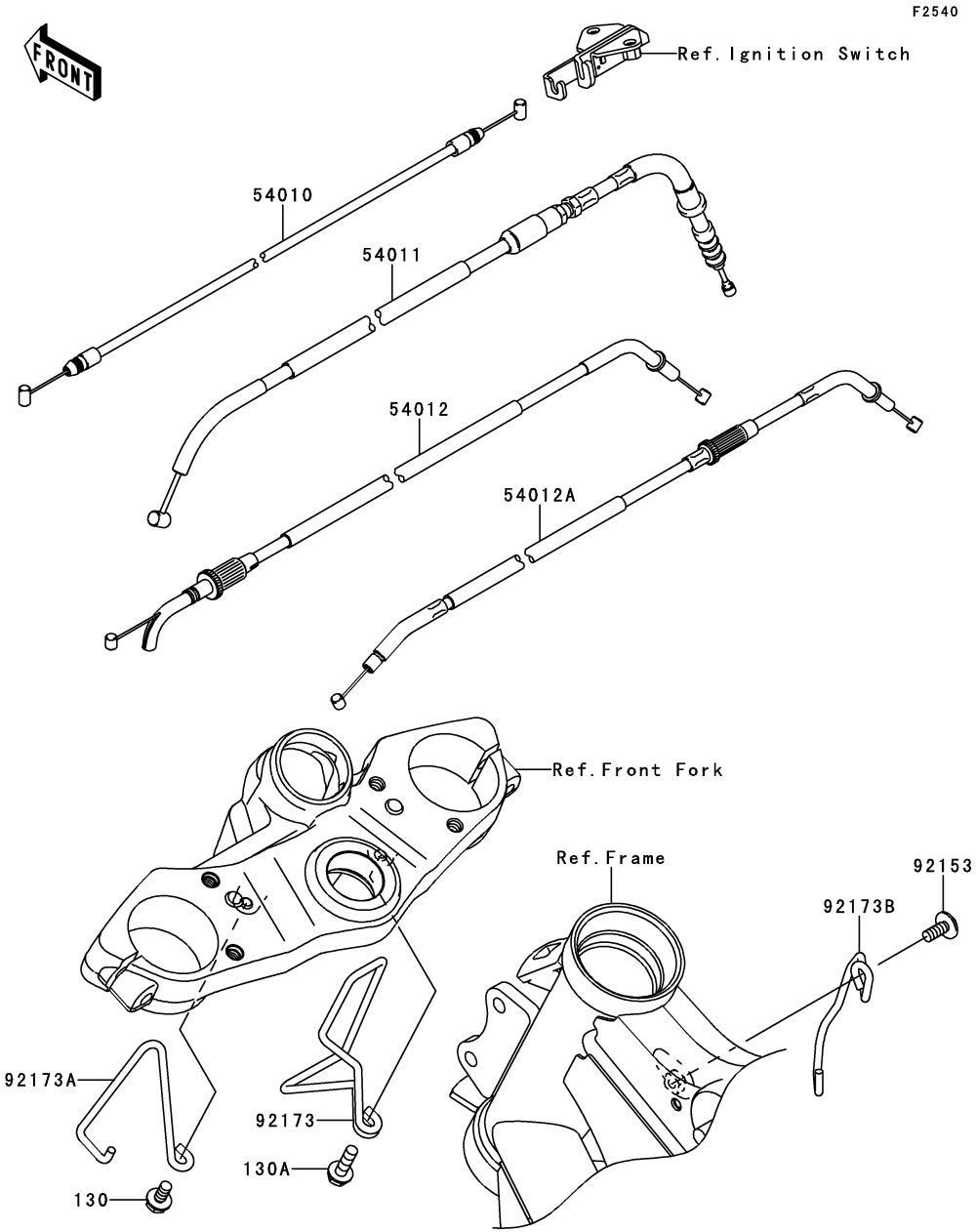

Ref. No.	Part No.	Description	Spec Code	Quantity-KLE650 ’10 CAF
54010	54010-0029	CABLE,SEAT LOCK		1
54011	54011-0082	CABLE-CLUTCH		1
54012	54012-0208	CABLE-THROTTLE,OPENING		1
54012A	54012-0209	CABLE-THROTTLE,CLOSING		1
92153	92153-1446	BOLT,SOCKET,6X14		1
92173	92173-0109	CLAMP,UPP BKT,RH		1
92173A	92173-0216	CLAMP,UPP BKT,LH		1
92173B	92173-0241	CLAMP,CABLE		1
130	130BA0614	BOLT-FLANGED,6X14		1
130A	130BA0620	BOLT-FLANGED,6X20		1

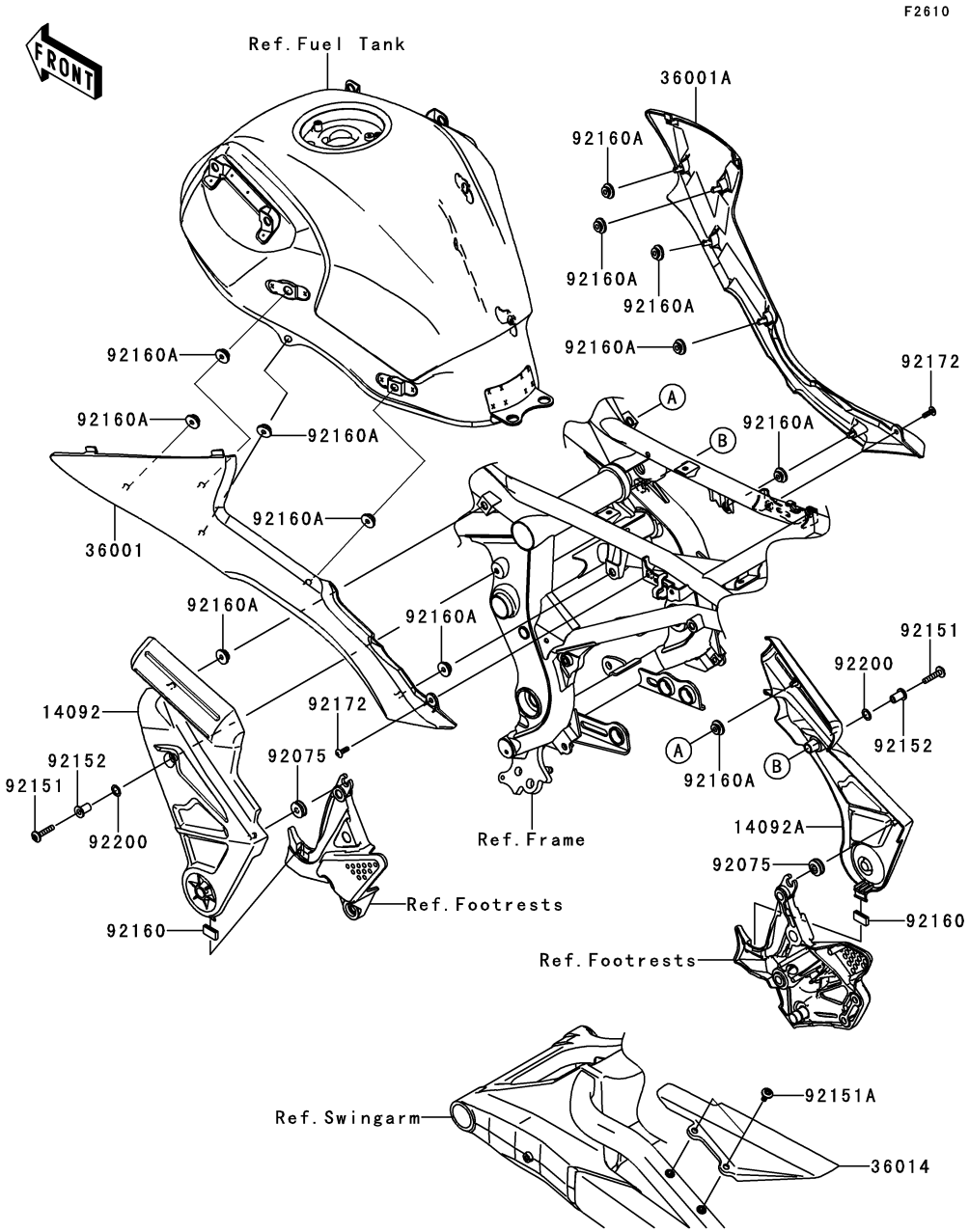

Ref. No.	Part No.	Description	Spec Code	Quantity-KLE650 '10 CAF				
14092	14092-0158-458	COVER,PIVOT,LH,P.SILVER		1				
14092A	14092-0159-458	COVER,PIVOT,RH,P.SILVER		1				
36001	36001-0196	COVER-SIDE,LH		1				
36001A	36001-0197	COVER-SIDE,RH		1				
36014	36014-0018	CASE-CHAIN,RR		1				
92075	92075-1067	DAMPER		2				
92151	92151-1605	BOLT,SOCKET,6X30		2				
92151A	92151-1654	BOLT,SOCKET,6X14		2				
92152	92152-0627	COLLAR		2				
92160	92160-1190	DAMPER		2				
92160A	92160-1613	DAMPER		12				
92172	92172-0322	SCREW,5X16		2				
92200	92200-0157	WASHER,10.4X15.9X0.5		2				

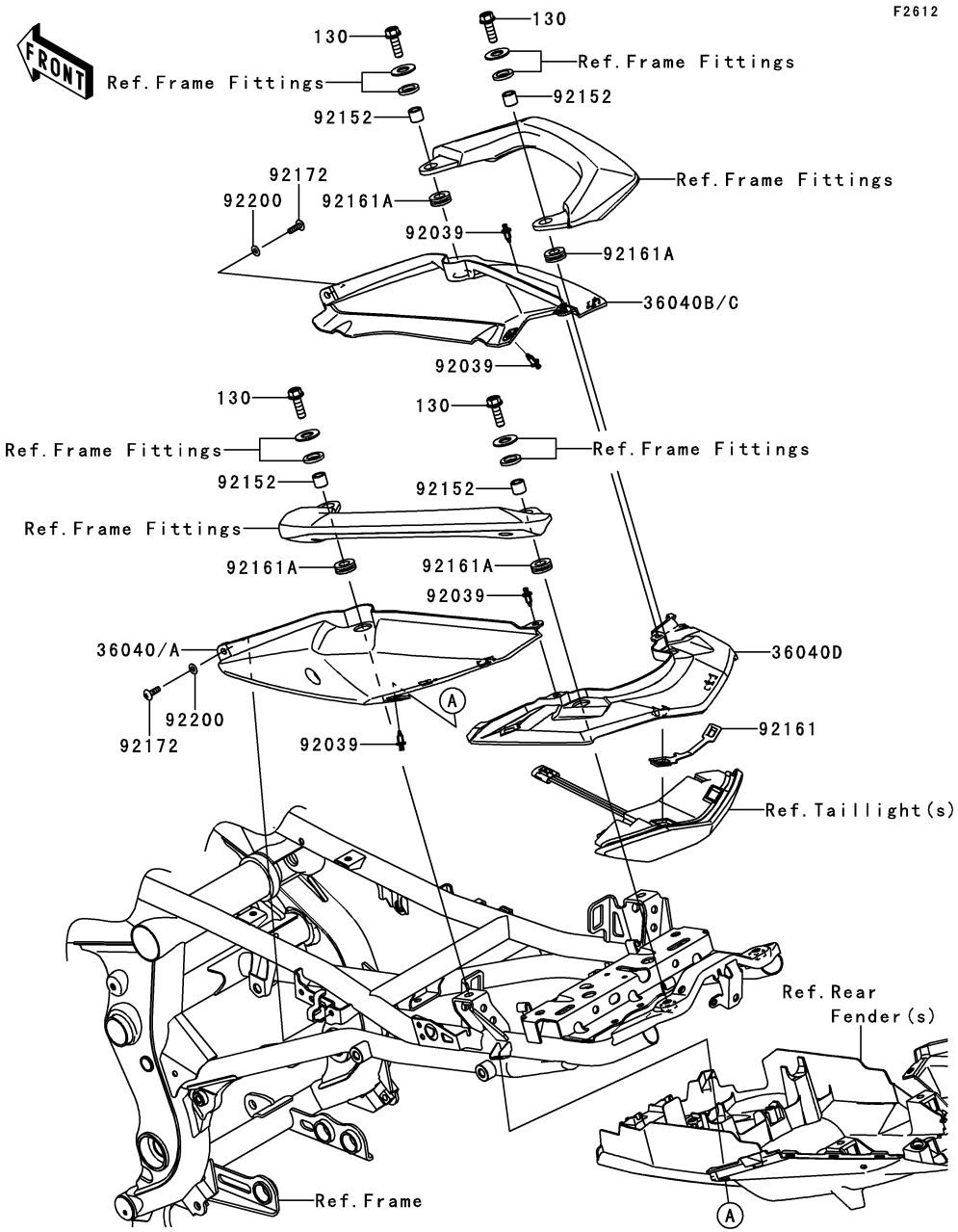

Ref. No.	Part No.	Description	Spec Code	Quantity-KLE650 ’10	CAF
36040	36040-0096-10A	COVER-TAIL,LH,P.S.YELLOW		1	
36040A	36040-0096-660	COVER-TAIL,LH,M.S.BLACK		1	
36040B	36040-0097-10A	COVER-TAIL,RH,P.S.YELLOW		1	
36040C	36040-0097-660	COVER-TAIL,RH,M.S.BLACK		1	
36040D	36040-0108	COVER-TAIL,CNT		1	
92039	92039-0023	RIVET		4	
92152	92152-0546	COLLAR,9.2X13.8X12.5		4	
92161	92161-0808	DAMPER,TAIL LAMP		1	
92161A	92161-0868	DAMPER		4	
92172	92172-0322	SCREW,5X16		2	
92200	92200-1480	WASHER,NYLON,5.3X11.5X0.5		2	
130	130CA0830	BOLT-FLANGED,8X30		4	

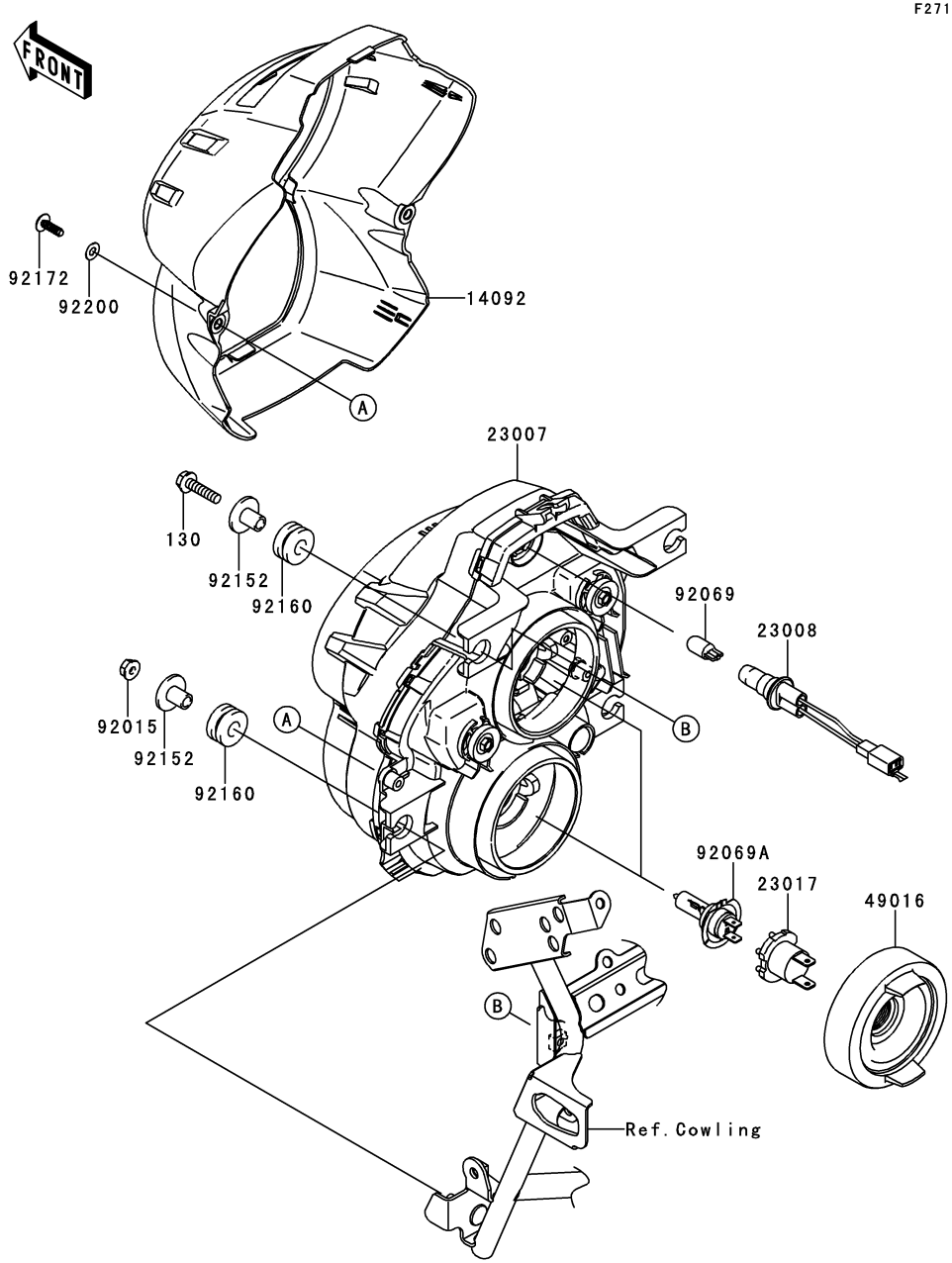

Ref. No.	Part No.	Description	Spec Code	Quantity-KLE650 ’10 CAF
14092	14092-0073-27E	COVER,HEAD LAMP,M.SILVER		1
23007	23007-0149	LENS-COMP,HEAD LAMP		1
23008	23008-0120	SOCKET-ASSY,HEAD LAMP		1
23017	23017-0003	SOCKET,HEAD LAMP		2
49016	49016-0075	COVER-SEAL,HEAD LAMP		2
92015	92015-1233	NUT,FLANGED,6MM,BLACK		2
92069	92069-1016	BULB,12V 5W		1
92069A	92069-1126	BULB,12V 55W,H7		2
92152	92152-0048	COLLAR		4
92160	92160-1162	DAMPER		4
92172	92172-0175	SCREW,TAPPING,5X16		2
92200	92200-1480	WASHER,NYLON,5.3X11.5X0.5		2
130	130BA0625	BOLT-FLANGED,6X25		2

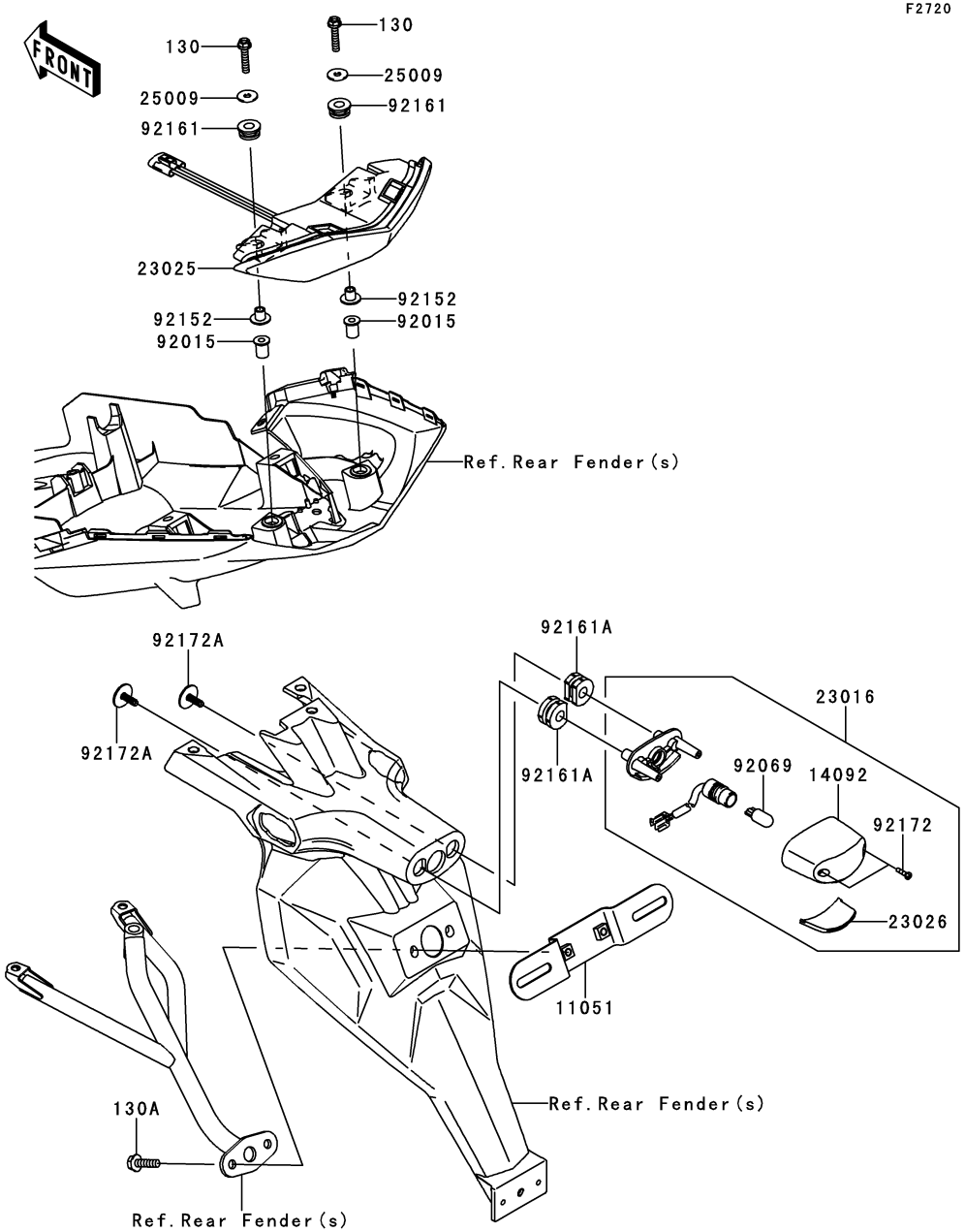

F2720

Ref. No.	Part No.	Description	Spec Code	Quantity-KLE650 '10	CAF
11051	11051-1503	BRACKET,LICENSE		1	
14092	14092-0001	COVER,LICENSE LAMP		1	
23016	23016-0043	LAMP-ASSY,LICENSE		1	
23025	23025-0068	LAMP-TAIL		1	
23026	23026-0015	LENS,LICENSE LAMP		1	
25009	25009-004	WASHER,5.2X16X1.2		2	
92015	92015-1757	NUT,WELL,5MM		2	
92069	92069-1016	BULB,12V 5W		1	
92152	92152-0092	COLLAR		2	
92161	92161-0317	DAMPER		2	
92161A	92161-0776	DAMPER		2	
92172	92172-0343	SCREW,TAPPING,2.9X13		2	
92172A	92172-0481	SCREW,TAPTITE,5X16		2	
130	130BA0525	BOLT-FLANGED,5X25		2	
130A	130BA0620	BOLT-FLANGED,6X20		2	

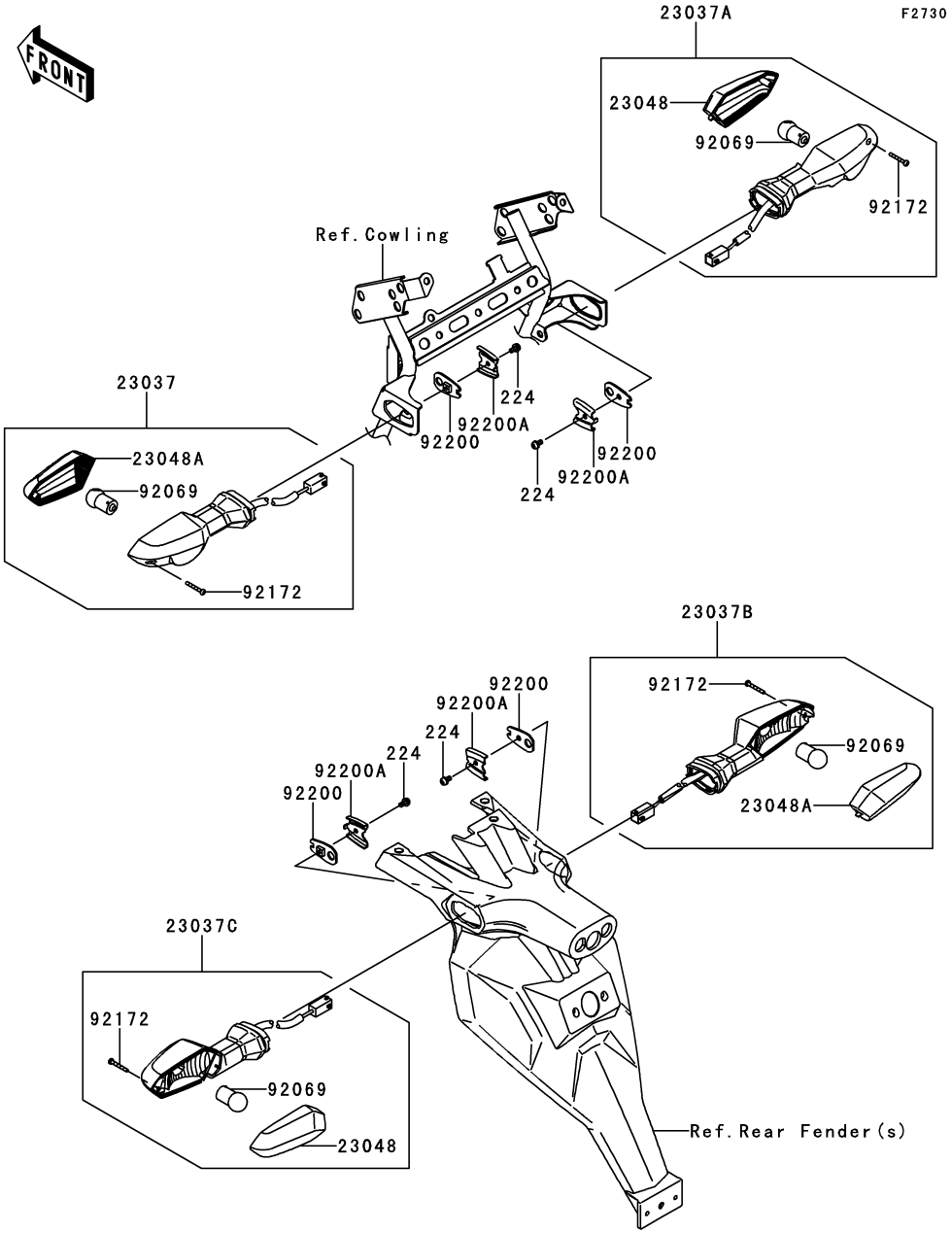

Ref. No.	Part No.	Description	Spec Code	Quantity-KLE650 ’10 CAF
23037	23037-0167	LAMP-ASSY-SIGNAL,FR,LH		1
23037A	23037-0168	LAMP-ASSY-SIGNAL,FR,RH		1
23037B	23037-0170	LAMP-ASSY-SIGNAL,RR,RH		1
23037C	23037-0172	LAMP-ASSY-SIGNAL,RR,LH		1
23048	23048-0014	LENS-SIGNAL LAMP		2
23048A	23048-0015	LENS-SIGNAL LAMP		2
92069	92069-0024	BULB,12V 10W		4
92172	92172-0395	SCREW,2.9X22		4
92200	92200-0164	WASHER,SIGNAL LAMP		4
92200A	92200-0165	WASHER,SIGNAL LAMP		4
224	224AB0408	SCREW-PAN-WP-CROS,4X8		4

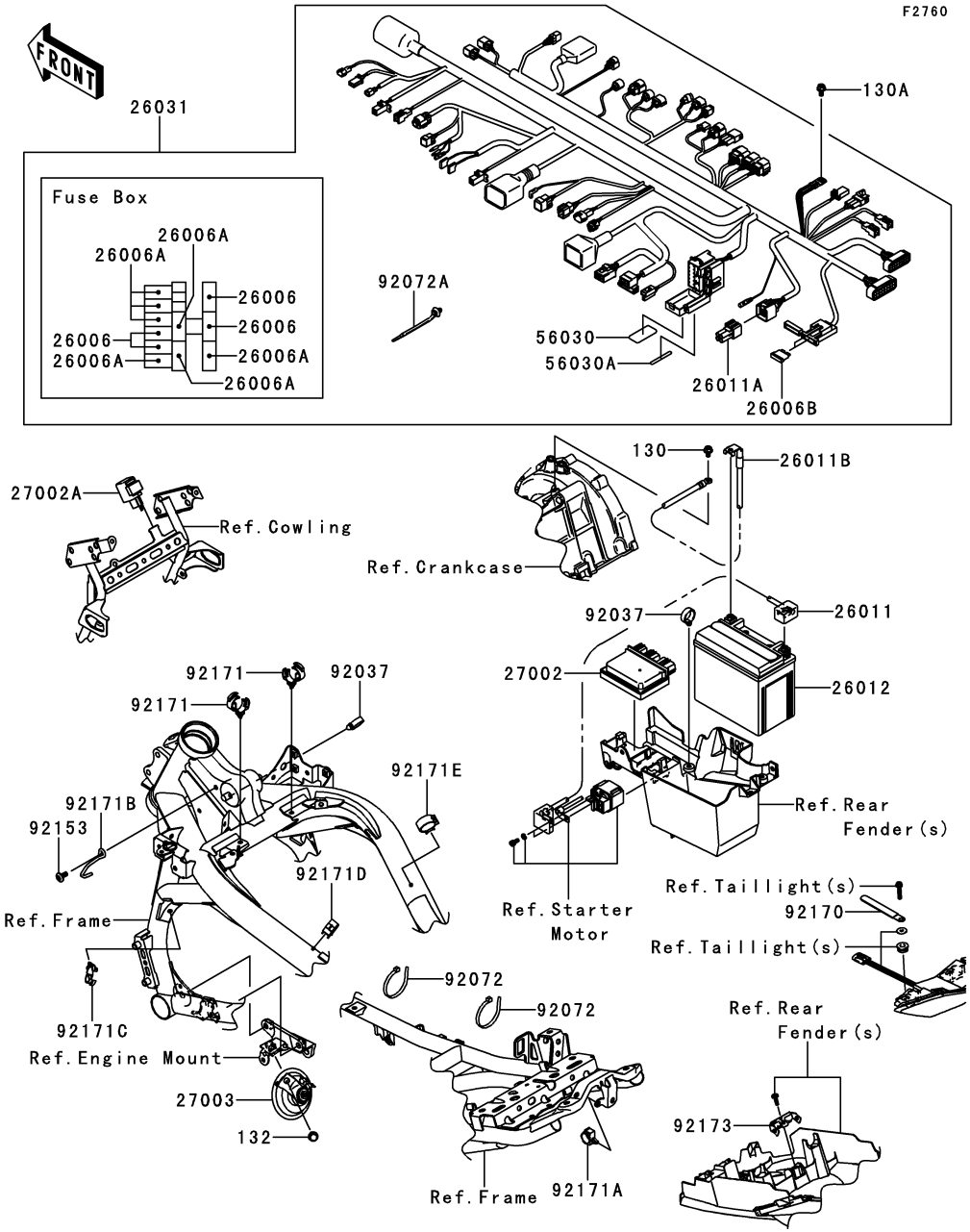

Ref. No.	Part No.	Description	Spec Code	Quantity-KLE650 '10 CAF
26006	26006-0001	FUSE,15A		4
26006A	26006-1078	FUSE,10A		7
26006B	26006-1082	FUSE,5A		2
26011	26011-0073	WIRE-LEAD,BATTERY(+)		1
26011A	26011-0271	WIRE-LEAD,CAP		1
26011B	26011-0299	WIRE-LEAD,BATTERY(-)		1
26012	26012-0094	BATTERY,YTX12-BS,12V 10AH		1
26031	26031-0819	HARNESS,MAIN		1
27002	27002-0007	RELAY-ASSY		1
27002A	27002-1097	RELAY-ASSY,SIGNAL LAMP		1
27003	27003-0051	HORN		1
56030	56030-0346	LABEL,FUSE BOX		1
56030A	56030-0360	LABEL,FUSE BOX		1
92037	92037-1827	CLAMP,HOSE		2
92072	92072-1197	BAND,L=365		2
92072A	92072-1414	BAND		15
92153	92153-1446	BOLT,SOCKET,6X14		1
92170	92170-1925	CLAMP		1
92171	92171-0069	CLAMP,DIA=20		2
92171A	92171-0316	CLAMP,BRAKE HOSE		1
92171B	92171-0657	CLAMP,HARNESS		1
92171C	92171-1415	CLAMP,DIA=13		1
92171D	92171-1424	CLAMP,DIA=15		1
92171E	92171-1559	CLAMP,DIA=25		1
92173	92173-0218	CLAMP,FUSE BOX		1
130	130BA0610	BOLT-FLANGED,6X10		1
130A	130BA0612	BOLT-FLANGED,6X12		1
132	132BB0812	BOLT-FLANGED-SMALL,8X12		1

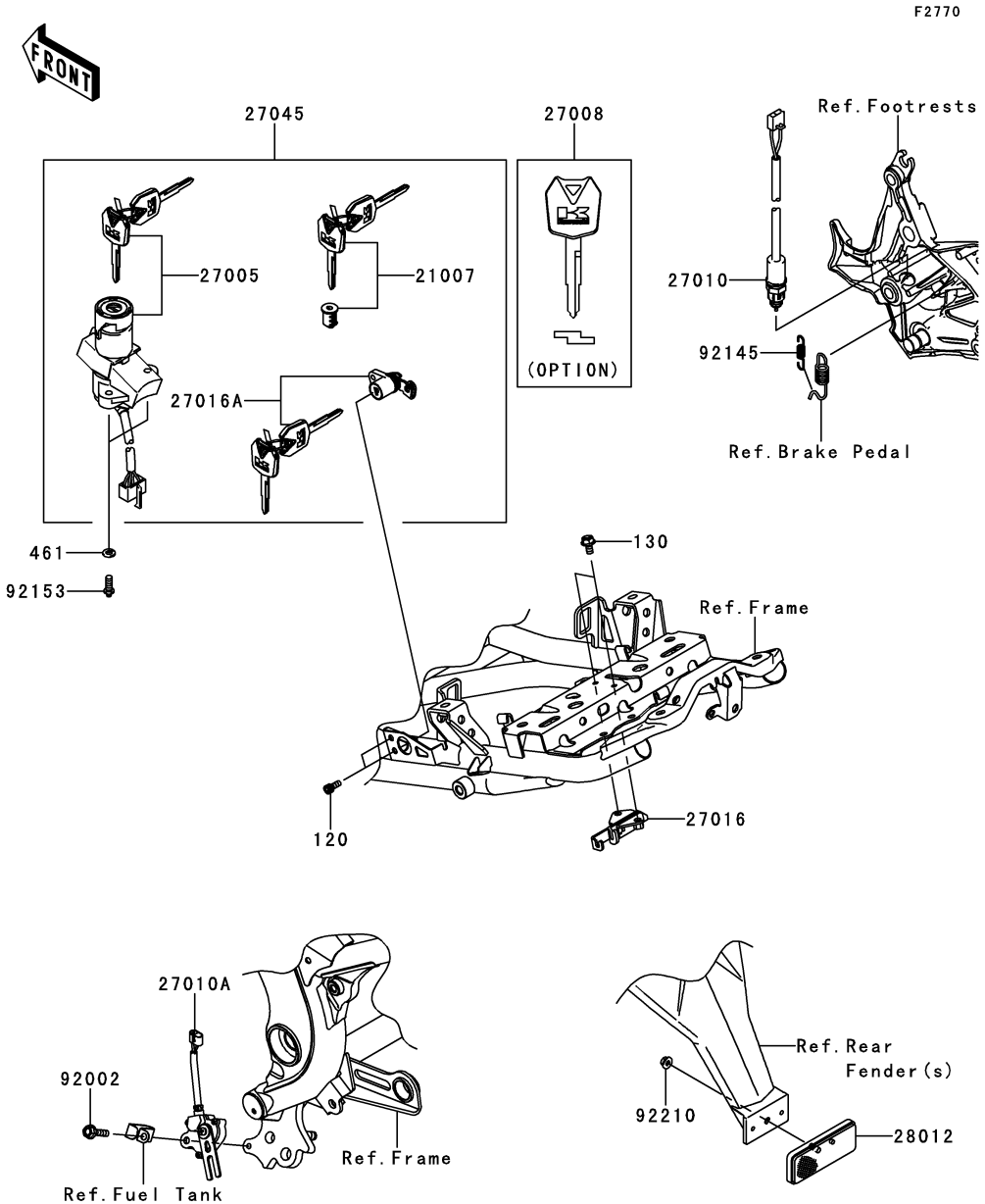

Ref. No.	Part No.	Description	Spec Code	Quantity-KLE650 '10 CAF
21007	21007-5057	ROTOR,LOCK,TANK CAP		1
27005	27005-5141	SWITCH-ASSY-IGNITION		1
27008	27008-0030 (OPTION)	KEY-LOCK,BLANK		1
27010	27010-0072	SWITCH,REAR BRAKE		1
27010A	27010-1455	SWITCH,SIDE STAND		1
27016	27016-1115	LOCK-ASSY,SEAT STRIKER		1
27016A	27016-5309	LOCK-ASSY,SEAT		1
27045	27045-5360	SWITCH-ASSY		1
28012	28012-1077	REFLECTOR-REFLEX		1
92002	92002-1582	BOLT,FLANGED,6X25		1
92145	92145-0091	SPRING,REAR BRAKE SWITCH		1
92153	92153-0967	BOLT,TORX,6X16		2
92210	92210-0007	NUT,FLANGED,5MM		1
120	120CB0512	BOLT-SOCKET,5X12		2
130	130BA0612	BOLT-FLANGED,6X12		2
461	461DA0600	WASHER-SPRING,6MM		2

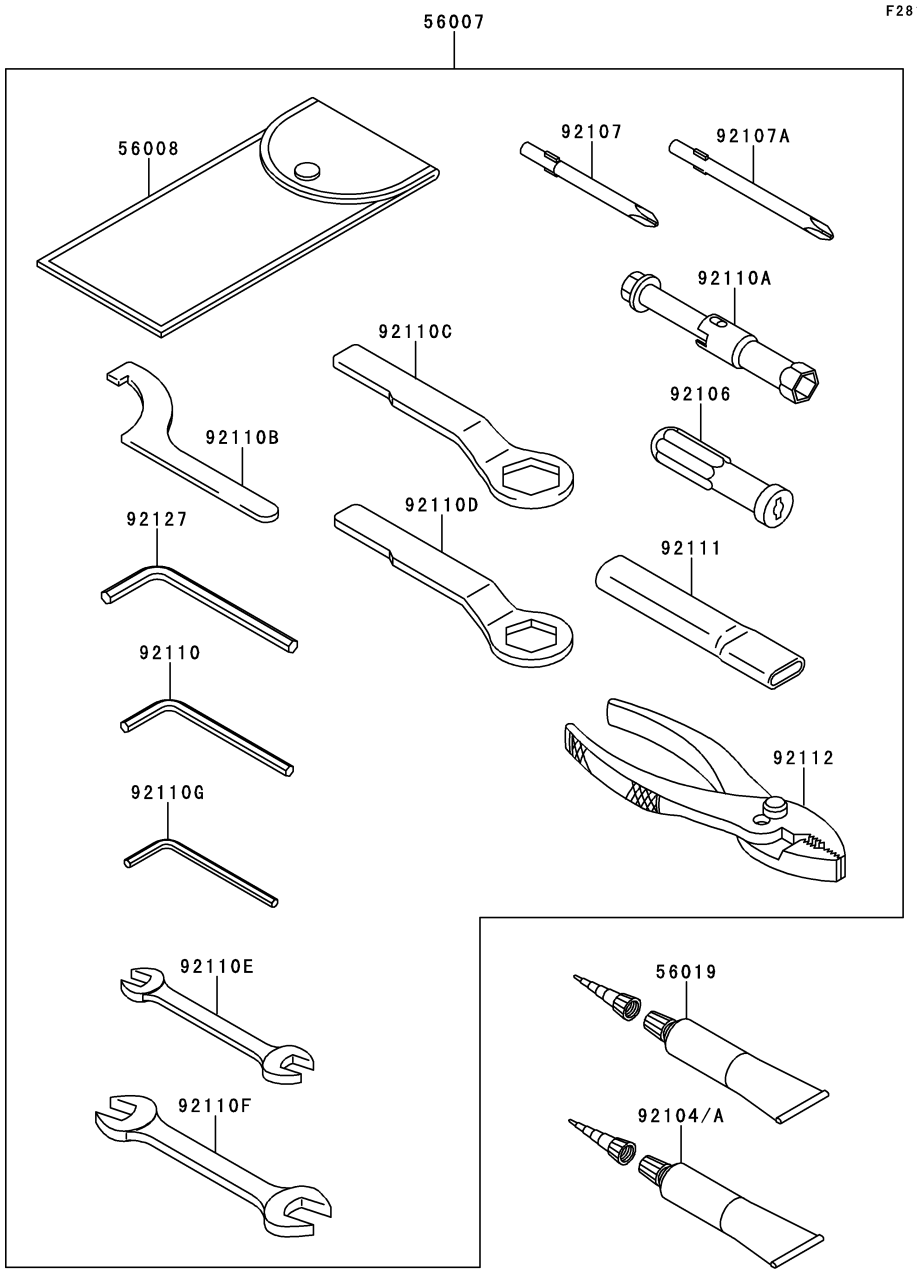

Ref. No.	Part No.	Description	Spec Code	Quantity-KLE650 ’10	CAF			
56007	56007-0026	TOOL-KIT		1				
56008	56008-1075	BAG,TOOL		1				
56019	56019-120	GASKET-LIQUID,TB1211,WHITE		1				
92104	92104-0004	GASKET-LIQUID,TB1211F,CLEAR		1				
92104A	92104-1064	GASKET-LIQUID,TB1216B,BLACK		1				
92106	92106-1001	GRIP-SCREW DRIVER		1				
92107	92107-005	TOOL-DRIVER,#3PHILLIPS		1				
92107A	92107-1053	TOOL-DRIVER,#2PHILLIPS		1				
92110	92110-1015	TOOL-WRENCH,ALLEN,5MM		1				
92110A	92110-1132	TOOL-WRENCH,BOX,16MM		1				
92110B	92110-1144	TOOL-WRENCH,HOOK		1				
92110C	92110-1147	TOOL-WRENCH,BOX END,27MM		1				
92110D	92110-1148	TOOL-WRENCH,BOX END,22MM		1				
92110E	92110-1152	TOOL-WRENCH,OPEN END,10X12		1				
92110F	92110-1153	TOOL-WRENCH,OPEN END,14X17		1				
92110G	92110-3703	TOOL-WRENCH,ALLEN,4MM		1				
92111	92111-1051	TOOL-BAR,BOX END WRENCH		1				
92112	92112-1001	TOOL-PLIERS		1				
92127	92127-003	TOOL-WRENCH,ALLEN,6MM		1				

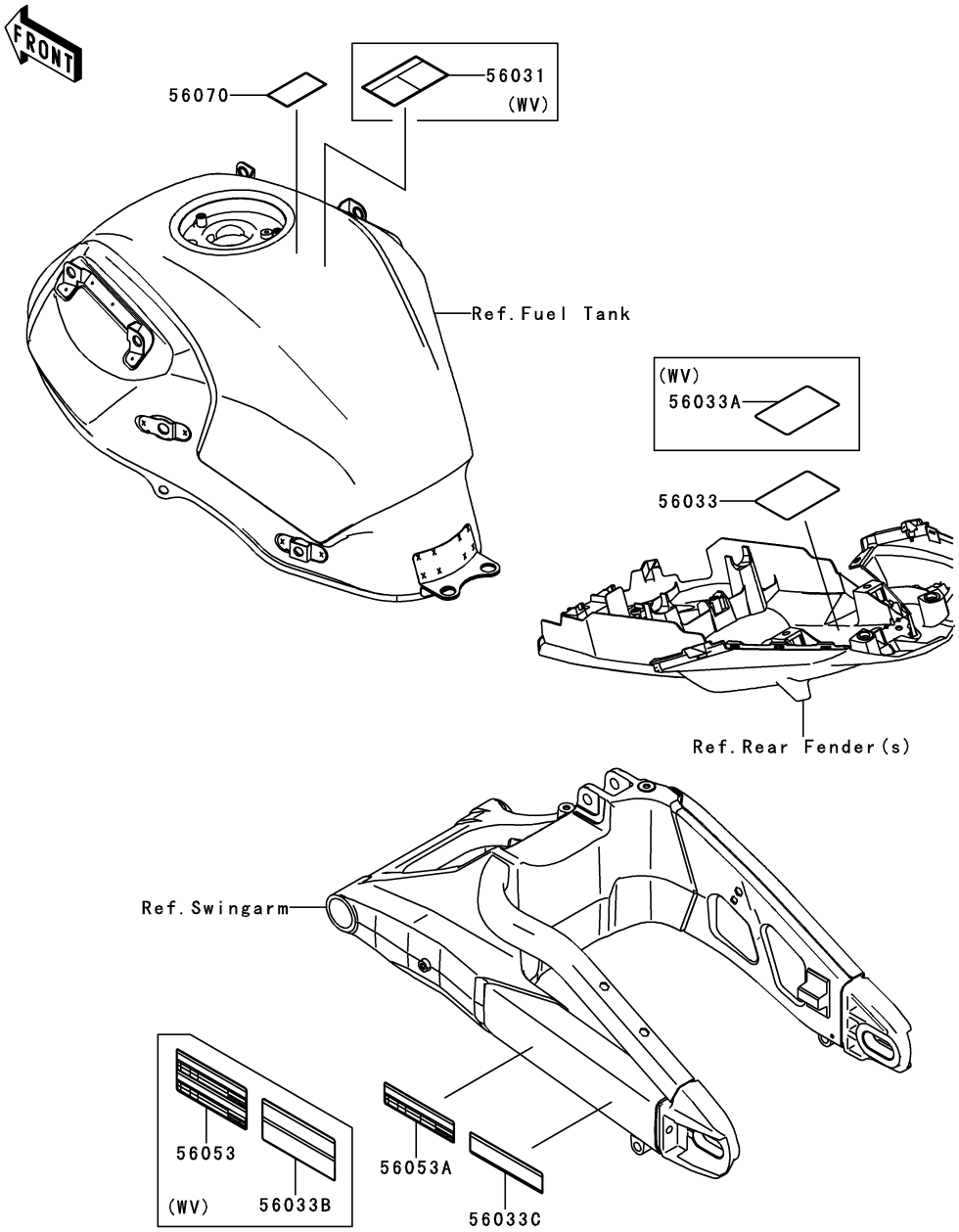

Ref. No.	Part No.	Description	Spec Code	Quantity-KLE650 '10	CAF
56031	56031-1441	LABEL-MANUAL,ENGLISH/FRENCH			
	L		WV	1	
56033	56033-0312	LABEL-MANUAL,DAILY SAFETY		1	
56033A	56033-0313	LABEL-MANUAL,DAILY SAFETY			
	L		WV	1	
56033B	56033-0356	LABEL-MANUAL,CHAIN			
	L		WV	1	
56033C	56033-0357	LABEL-MANUAL,CHAIN			
	L		UK	1	
56053	56053-0495	LABEL-SPECIFICATION,TIRE&LOAD			
	L		WV	1	
56053A	56053-0496	LABEL-SPECIFICATION,TIRE&LOAD			
	L		UK	1	
56070	56070-1143	LABEL,UNLEADED PETROL ONLY		1	

F2861

Ref. No.	Part No.	Description	Spec Code	Quantity-KLE650 ’10 CAF				
56052	56052-1957	MARK,UPP COWLING,KAWASAKI		2				
56054	56054-0604	MARK,UPP COWLING,VERSYS		2				

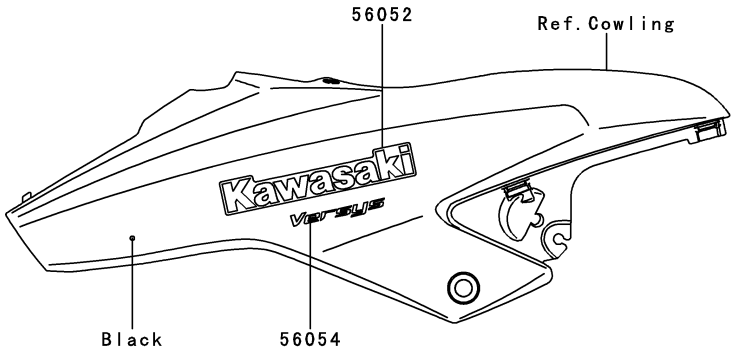

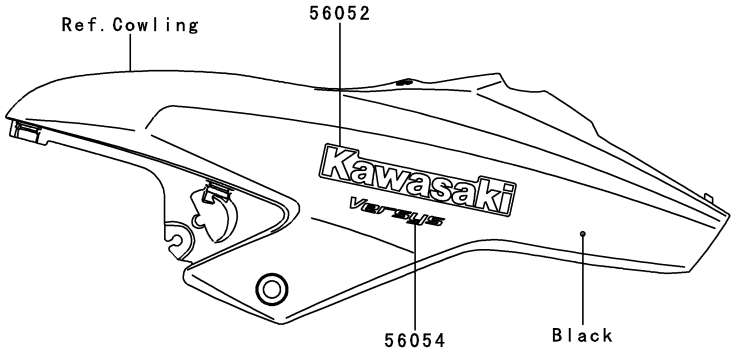

F2861A

Ref. No.	Part No.	Description	Spec Code	Quantity-KLE650 ’10 CAF				
56052	56052-0350	MARK,KAWASAKI		2				
56054	56054-0605	MARK,UPP COWLING,VERSYS		2				

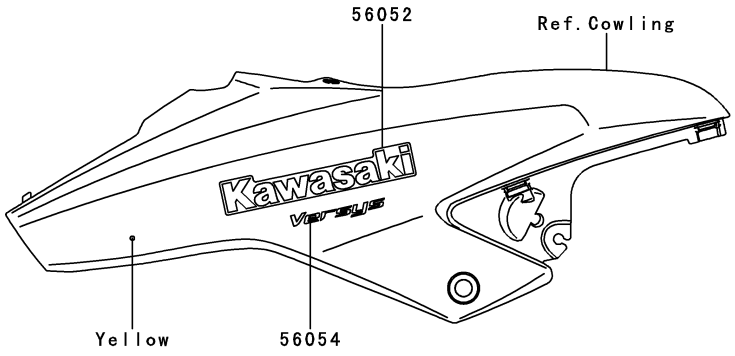

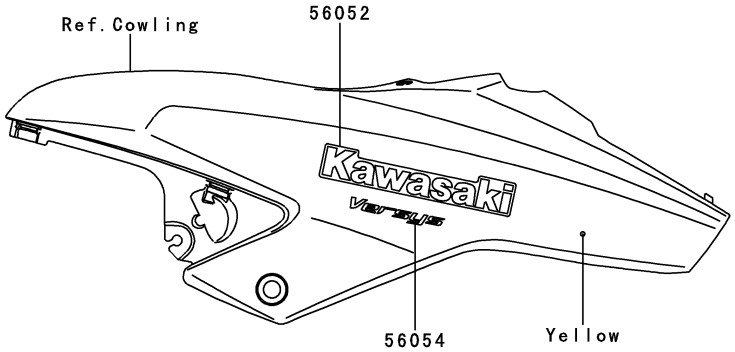

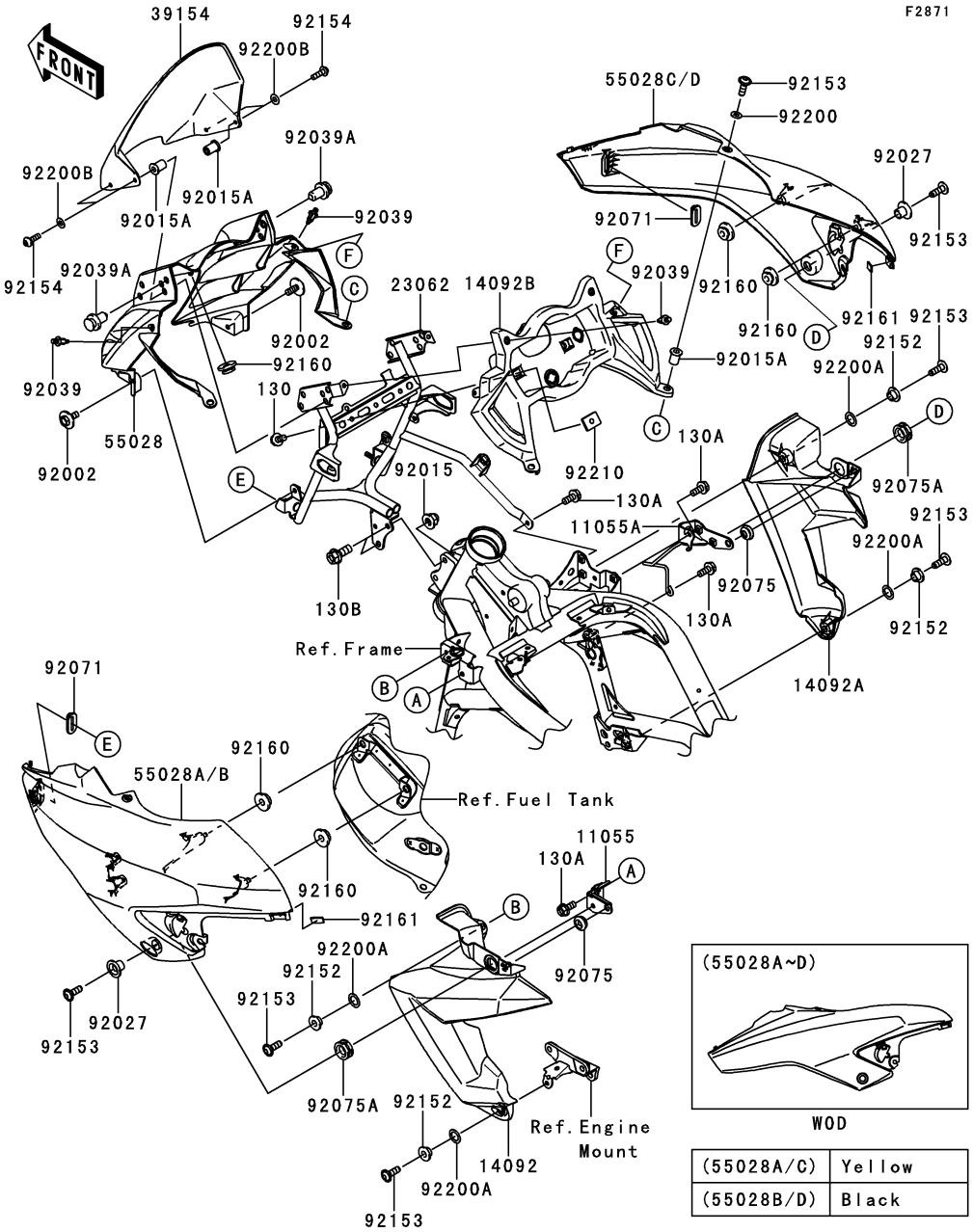

(55028A/C)	Yellow
(55028B/D)	Black

Ref. No.	Part No.	Description	Spec Code	Quantity-KLE650 '10 CAF
11055	11055-1887	BRACKET,COWLING,LH		1
11055A	11055-1888	BRACKET,COWLING,RH		1
14092	14092-0074-458	COVER,RADIATOR,LH,P.SILVER		1
14092A	14092-0075-458	COVER,RADIATOR,RH,P.SILVER		1
14092B	14092-0165	COVER,METER		1
23062	23062-0112	BRACKET-COMP,COWLING,CNT		1
39154	39154-0053	WINDSHIELD		1
55028	55028-0309	COWLING,UPP		1
55028A	55028-0354-10A	COWLING,SIDE,LH,P.S.YELLOW		1
55028B	55028-0354-660	COWLING,SIDE,LH,M.S.BLACK		1
55028C	55028-0355-10A	COWLING,SIDE,RH,P.S.YELLOW		1
55028D	55028-0355-660	COWLING,SIDE,RH,M.S.BLACK		1
92002	92002-1188	BOLT,6X16		2
92015	92015-1174	NUT,CAP,8MM,BLACK		2
92015A	92015-1757	NUT,WELL,5MM		6
92027	92027-1045	COLLAR,L=9.6		2
92039	92039-0023	RIVET		4
92039A	92039-0098	RIVET		2
92071	92071-0013	GROMMET		2
92075	92075-1011	DAMPER		2
92075A	92075-1634	DAMPER		2
92152	92152-1359	COLLAR		4
92153	92153-0478	BOLT,6X18		8
92154	92154-0209	BOLT,SOCKET,5X16		4
92160	92160-1613	DAMPER		5
92161	92161-0726	DAMPER		2
92200	92200-0006	WASHER,NYLONE,5.3X11.5X0.5		2
92200A	92200-0157	WASHER,10.4X15.9X0.5		4
92200B	92200-1480	WASHER,NYLON,5.3X11.5X0.5		4
92210	92210-1352	NUT,PLATE,6MM		2
130	130BA0612	BOLT-FLANGED,6X12		2
130A	130BA0614	BOLT-FLANGED,6X14		4
130B	130BA0820	BOLT-FLANGED,8X20		2

F2920

Owner's Manual
(Local Procurement)

99976/A
99986

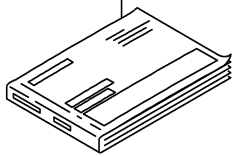

Ref. No.	Language
(99976)	English
	French
	German
(99976A)	Italian
	Spanish
	Dutch
(99986)	English

Service Manual

99901
99924
99953
99954
99955
99956

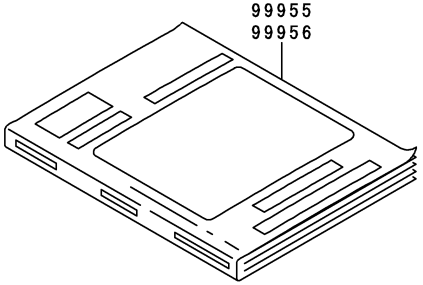

Ref. No.	Language
(99901)	Dutch
(99924)	English
(99953)	German
(99954)	French
(99955)	Italian
(99956)	Spanish

A&P Manual

99903
99931
99946
99950
99951
99952

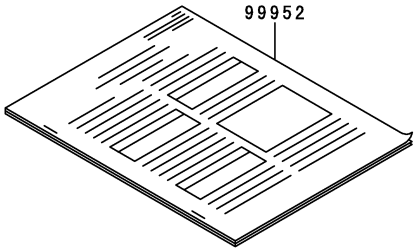

Ref. No.	Language
(99903)	Dutch
(99931)	English
(99946)	German
(99950)	French
(99951)	Italian
(99952)	Spanish

Ref. No.	Part No.	Description	Spec Code	Quantity-KLE650 '10 CAF
99901	99901-0023-01	SERVICE MANUAL,DUTCH		1
99903	99903-0023-01	A&P MANUAL,DUTCH		1
99924	99924-1435-01	SERVICE MANUAL,ENGLISH		1
99931	99931-1516-01	A&P MANUAL,ENGLISH		1
99946	99946-1063-01	A&P MANUAL,GERMAN		1
99950	99950-1071-01	A&P MANUAL,FRENCH		1
99951	99951-1052-01	A&P MANUAL,ITALIAN		1
99952	99952-1039-01	A&P MANUAL,SPANISH		1
99953	99953-1060-01	SERVICE MANUAL,GERMAN		1
99954	99954-1072-01	SERVICE MANUAL,FRENCH		1
99955	99955-1050-01	SERVICE MANUAL,ITALIAN		1
99956	99956-1036-01	SERVICE MANUAL,SPANISH		1
99976	99976-1515	OWNER’S MANUAL,EN/FR/DE		1
99976A	99976-1516	OWNER’S MANUAL,IT/ES/NL		1
99986	99986-1527	OWNER’S MANUAL,ENGLISH		1

Part No.	Grid No.
11004-0064	B-3
11005-0082	B-5
11008-0107	B-3
11009-1145	D-6
11010-0153	B-6
11012-1084	D-6
11012-1761	F-9
11012-1817	C-7
11029-0008	B-6
11051-1503	G-5
11053-1739	C-7
11054-0420	B-7
11054-0421	B-7
11054-0485	B-7
11054-0486	B-7
11054-0869	B-4
11054-1283	E-5
11054-1284	E-5
11055-1872	E-5
11055-1873	E-10
11055-1875	F-4
11055-1887	G-13
11055-1888	G-13
11055-1926	F-10
11055-1929	E-5
11056-0236	E-10
11060-1952	F-10
11061-0029	F-5
11061-0105	B-4
11061-0107	D-4
11061-0164	C-7
11061-0165	C-7
11061-0166	C-7
11061-0167	C-8
11061-0170	B-4
11061-0171	B-5
11061-0278	B-7
11065-0018	C-9
11065-0120	B-6
11065-0196	F-9
11065-0197	F-9
11065-0208	B-4
112AB0645	F-8
12004-0015	B-8
12005-0035	B-8
12009-1091	B-8
12011-1053	B-8
12021-1130	B-4
12032-0009	B-8
12046-0040	C-12
12046-0041	B-9
12048-0038	B-9
12053-0051	B-9
12053-0059	B-9
12053-0071	C-12
12053-0075	B-9
120CA0622	E-10
120CA0818	C-13
120CA0830	E-5
120CA0830	F-8
120CB0510	D-3
120CB0512	G-8
120CB0622	F-4
120CB0625	F-8
120CB0840	F-9
120CC0830	F-8
120CD0630	B-3
120CD0630	B-5
13001-0087	B-5
13002-0007	B-5
13008-1196	B-5
13031-0097	B-10
13042-5002	F-8
13070-0045	F-7
13087-0042	B-12
13088-1105	B-12
13089-0016	B-12
13089-0017	B-12
13095-0112	B-12
130BA0512	C-14
130BA0518	C-11
130BA0525	G-5
130BA0610	E-5
130BA0610	G-7
130BA0612	G-13
130BA0612	G-7
130BA0612	G-8
130BA0614	F-13
130BA0614	F-4
130BA0614	G-13
130BA0616	E-10
130BA0616	F-6
130BA0620	C-13
130BA0620	C-7
130BA0620	F-13
130BA0620	G-5
130BA0622	D-5
130BA0625	F-10
130BA0625	G-4
130BA0820	G-13
130BB0645	E-10
130CA0830	G-3
130CD0835	B-7
13102-0029	B-12
13107-0156	C-12
13107-1106	D-3
13116-0018	B-12
13116-0032	F-4
13127-0028	B-13
13128-0020	B-13
13140-0025	B-14
13140-0026	B-14
13141-0018	B-14
13144-0024	B-13
13145-0020	B-14
13151-1080	C-7
13159-1056	F-6
13187-1006	B-12
13194-1083	D-3
13227-0012	D-4
13234-0042	B-11
13236-0094	C-3
13236-0136	C-3
13236-0137	C-3
13236-0169	F-4
13251-0010-JJ	B-10
13251-0010-KK	B-10
13262-0245	B-13
13262-0246	B-13
13262-0251	B-13
13262-0252	B-13
13262-0253	B-13
13262-0335	B-13
13262-0337	B-13
13262-0338	B-13
13262-0447	B-13
13262-0498	B-13
13271-0575	C-4
13271-0577	C-4
13271-0584	C-4
13271-0626	B-14
13271-0952	C-13
13271-1187	C-4
13272-0573	F-4
13280-0134	C-8
13280-0183	B-14
13280-0192	B-14
13280-0224	C-4
13280-0306	F-8
13280-0307	F-8
13280-1263	D-3
132BA0618	B-4
132BA0822	E-4
132BB0612	B-4
132BB0622	E-5
132BB0630	C-7
132BB0812	G-7
132BC0620	D-6
132BC0630	C-7
132BC0630	D-4
132BC0670	C-7
13320-0010	C-3
14001-0142	C-4
14013-1004	C-4
14014-0018	B-14
14014-0019	B-13
14014-0020	B-13
14026-0076	C-7
14031-0096	C-7
14032-0115	C-7
14043-0008	C-8
14055-0018	C-4
14069-1004	F-10
14073-0110	B-6
14079-0017	B-6
14091-0715	E-10
14091-0719	B-4
14091-0720	C-7
14091-0864	F-12
14092-0001	G-5
14092-0073-27E	G-4
14092-0074-458	G-13
14092-0075-458	G-13
14092-0158-458	F-14
14092-0159-458	F-14
14092-0165	G-13
16007-1228	B-8
16014-0002	C-9
16065-0024	B-3
16073-3707	C-9
16085-0074	D-3
16085-0076	D-3
16097-0004	C-12
16115-1053	C-7
16126-0019	B-6
16126-1140	E-12
16130-1058	C-12
16142-0024	C-12
16142-0046	D-4
16154-0037	C-12
16154-1115	C-12
16160-0110	C-12
16160-0118	D-6
16163-0099	C-9
16165-0001	C-4
18091-0642	B-7
180AA0616	F-3
18140-0002	B-7
21003-0042	C-13
21007-0053	C-14
21007-0075	C-13
21007-5057	G-8
21039-0004	D-3
21040-0003	D-3
21066-1127	C-13
21163-0040	D-3
21171-0028	C-14
21175-0204	C-11
21176-0009	C-11
21176-0026	C-11
21176-0048	C-11
21176-0065	C-7
21176-0105	C-11
21176-0111	C-11
220AB0525	F-8
220AB0540	F-8
224AB0408	G-6
23007-0149	G-4
23008-0120	G-4
23016-0043	G-5
23017-0003	G-4
23025-0068	G-5
23026-0015	G-5
23037-0167	G-6
23037-0168	G-6
23037-0170	G-6
23037-0172	G-6
23048-0014	G-6
23048-0015	G-6
23062-0112	G-13
25009-004	G-5
25023-0023	F-12
25031-0347	F-12
26006-0001	G-7
26006-1006	D-3
26006-1078	G-7
26006-1082	G-7
26011-0073	G-7
26011-0161	D-3
26011-0271	G-7
26011-0299	G-7
26012-0094	G-7
26031-0819	G-7
27002-0007	G-7
27002-1097	G-7
27003-0051	G-7
27005-5141	G-8
27008-0030	G-8
27010-0025	F-4
27010-0072	G-8
27010-1094	F-8
27010-1313	C-4
27010-1446	D-3
27010-1455	G-8
27012-1316	E-10
27016-1115	G-8
27016-5309	G-8
27045-5360	G-8
28011-0175	F-12
28012-1077	G-8
290Q0606	C-4
318BA0800	E-6
32033-1535	C-12
32085-0047	E-8
32154-0661	C-4
32160-0435-26M	E-3
32190-0189	E-4
32190-0470	E-4
33001-0209-458	E-6
33032-1142	E-6
33040-1109	E-6
34003-1474	E-8
34024-0081	E-11
34028-0127	E-8
34028-0128	E-8
34028-0129	E-8
34028-0130	E-8
34028-0133	E-8
35004-0137-10A	E-9
35004-0137-660	E-9
35019-0102	E-10
35023-0163	E-10
35023-0196	E-10
35034-0116	E-10
35063-0310-458	E-8
35063-0401-458	E-8
35063-0478-26M	E-5
35063-0479-26M	E-5
36001-0196	F-14
36001-0197	F-14

Part No.	Grid No.
36014-0018	F-14
36040-0096-10A	G-3
36040-0096-660	G-3
36040-0097-10A	G-3
36040-0097-660	G-3
36040-0108	G-3
39061-0144	D-5
39062-0161	D-6
39062-0162	D-6
39062-0163	D-6
39062-0164	D-6
39076-0006	D-3
39110-1124	C-3
39154-0053	G-13
39178-0062	B-7
39193-0029	C-4
39193-0031	C-4
39193-0032	C-4
39193-0033	C-4
39193-0046	C-4
41009-0128	E-12
41009-0129	E-12
41068-0038	E-13
41068-0054	E-14
41073-0051-R2	E-14
41073-0053-R2	E-13
41075-0007	E-12
41075-0008	E-12
41075-0009	E-12
41080-0040	F-7
41080-0177-11I	F-5
410AB0600	F-8
42033-0028	E-14
42034-1143	C-13
42036-0024	E-7
42036-1251	E-14
42036-1358	E-6
42041-0089	E-14
42045-018	E-14
43001-0128	F-3
43010-1074	F-6
43015-0068	F-6
43015-0116	F-4
43020-0015	F-4
43020-1094	F-6
43020-1119	F-7
43022-1010	F-4
43026-0019	F-4
43026-1051	F-6
43027-0008	F-4
43027-1051	F-6
43028-0015	F-4
43028-1057	F-6
43034-0037	F-7
43034-0049	F-4
43044-1110	F-7
43044-1115	F-5
43044-1116	F-5
43048-1052	F-5
43049-1055	F-5
43049-1096	F-5
43049-1097	F-7
43056-1054	F-5
43056-1054	F-7
43057-003	F-5
43057-003	F-7
43078-0065	D-6
43078-1082	F-6
43080-0076-DJ	F-5
43080-0077-DJ	F-5
43080-0085-DJ	F-7
43082-0050	F-5
43082-0051	F-5
43082-1213	F-7
43084-003	F-5
43084-003	F-7
43094-1053	F-8
43095-0193	F-6
43095-0254	F-6
43095-0526	F-4
43095-0527	F-4
44008-0037-499	F-9
44013-0156-18R	F-9
44013-0157-18R	F-9
44023-0048	F-9
44023-0049	F-9
44026-0097	F-9
44028-1083	F-9
44037-0053	F-9
44039-0064-458	F-9
44045-051	F-9
44065-0001	F-9
44065-0002	F-9
44065-1017	E-7
44071-5111	F-9
44071-5112	F-9
45014-0147-458	E-7
46003-0167-10T	F-8
46012-0029-458	F-8
46012-0030-458	F-8
46019-0001	F-8
46019-0030	E-5
46019-0031	E-5
46075-1144	F-8
46076-0052	F-8
46091-0216	F-8
46091-0217	F-8
46092-0031	F-8
461DA0600	G-8
461DB0500	D-3
480J1300	C-3
480J2900	B-13
482EA0100	E-8
482EA5000	E-8
49002-1116	B-3
49006-1054	F-5
49006-1054	F-7
49006-1095	F-5
49006-1095	F-7
49006-1212	F-7
49016-0033	D-5
49016-0075	G-4
49016-1044	F-4
49033-0011	C-9
49034-0037	C-8
49040-0026	C-10
49047-0029	B-14
49047-0030	B-14
49054-0001	D-6
49063-1055	D-4
49065-0011	C-12
49078-0038	B-8
49085-1066	D-5
49091-0001	F-4
49091-0001	F-6
49107-0081-6Z	B-7
49107-0082-6Z	B-7
49118-0075	B-9
49118-0076	B-9
51001-0332-739	F-10
51044-0034	C-10
51049-0039	F-10
52005-0023	F-10
52005-0071	C-7
53003-0112-MA	F-11
53044-1174	E-5
53044-1185	D-5
53066-0296-MA	F-11
54010-0029	F-13
54011-0082	F-13
54012-0208	F-13
54012-0209	F-13
55020-0234	E-6
55020-0343	D-5
55020-0555	E-10
55028-0309	G-13
55028-0354-10A	G-13
55028-0354-660	G-13
55028-0355-10A	G-13
55028-0355-660	G-13
550AA2015	F-6
550AA4035	E-14
551A0408	D-4
551A0814	C-5
555A0408	B-10
56001-0174	F-8
56001-0175	F-8
56007-0026	G-9
56008-1075	G-9
56019-120	G-9
56030-0346	G-7
56030-0360	G-7
56031-1441	G-10
56033-0312	G-10
56033-0313	G-10
56033-0356	G-10
56033-0357	G-10
56052-0350	G-12
56052-1957	G-11
56053-0495	G-10
56053-0496	G-10
56054-0604	G-11
56054-0605	G-12
56070-1143	G-10
59026-0018	C-14
59256-0007	D-4
59502-0041	D-5
600A0500	B-13
600A0800	E-8
601B6004UU	E-13
601B6204UU	E-14
601B6205UU	E-14
610A0408	B-14
610A0408	C-7
670B2012	E-7
670B2020	C-7
670D1505	C-5
670D1508	C-5
670D1509	C-5
670D1510	C-5
670D2014	C-5
671B2540	C-7
671B2560	E-14
702A06750	F-10
702A07100	F-10
92001-1066	B-12
92001-1950	E-6
92002-1143	B-3
92002-1154	D-4
92002-1188	D-6
92002-1188	G-13
92002-1322	F-4
92002-1323	F-4
92002-1344	C-12
92002-1534	C-7
92002-1582	G-8
92002-1778	C-3
92002-1796	B-14
92002-1796	C-12
92002-1935	E-11
92003-208	B-9
92004-0024	C-4
92004-0025	B-3
92004-0028	E-14
92005-1238	C-4
92009-1134	F-8
92009-1164	F-12
92009-1360	C-7
92009-1375	B-13
92009-1375	B-14
92009-1404	E-8
92009-1984	B-6
92009-1984	C-11
92009-3845	E-10
92015-1174	G-13
92015-1188	E-11
92015-1188	E-4
92015-1191	F-8
92015-1197	F-8
92015-1233	F-4
92015-1233	G-4
92015-1311	B-10
92015-1433	E-7
92015-1443	C-3
92015-1444	C-3
92015-1476	D-3
92015-1487	D-5
92015-1555	B-12
92015-1602	F-6
92015-1724	E-6
92015-1757	E-10
92015-1757	G-13
92015-1757	G-5
92022-077	D-4
92022-1401	B-5
92022-1496	C-3
92022-1601	F-6
92022-1827	C-12
92022-1827	C-3
92022-1868	B-12
92022-228	F-3
92022-326	F-3
92025-1455	B-13
92026-022	B-12
92026-087	D-3
92026-1217	C-3
92026-1276	F-9
92026-1529	B-13
92027-1045	G-13
92027-1450	E-5
92027-1653	B-7
92027-251	D-5
92028-1449	B-13
92028-1903	B-10
92028-1904	B-10
92028-1905	B-10
92033-015	B-13
92033-1037	B-13
92033-1041	E-6
92033-1043	E-14
92033-1186	F-6
92033-1222	F-9
92033-1247	B-3
92036-008	B-5
92037-010	F-10
92037-147	B-6
92037-147	F-10
92037-1505	D-6
92037-1680	D-4
92037-1827	G-7
92037-1903	F-8
92039-0023	G-13
92039-0023	G-3
92039-0068	C-9
92039-0098	G-13
92039-1283	E-10
92042-007	B-3
92042-014	C-12
92043-0104	F-6
92043-0150	E-8

Part No.	Grid No.
92043-1037	C-4
92043-1145	E-8
92043-1263	C-7
92043-1271	E-8
92043-1489	F-5
92043-1489	F-7
92043-1567	B-3
92043-1567	B-5
92043-4009	B-4
92045-0017	E-6
92045-0042	B-13
92045-1122	B-14
92045-1224	B-13
92045-1235	B-12
92045-1384	E-3
92046-0008	E-6
92046-0017	C-4
92046-1010	C-7
92046-1148	C-4
92046-1148	C-7
92046-1185	B-13
92046-1272	E-7
92049-0022	E-3
92049-0058	F-9
92049-0103	C-3
92049-0115	D-4
92049-1056	E-14
92049-1057	E-13
92049-1181	E-6
92049-1185	E-6
92049-1287	E-14
92049-1349	B-8
92049-1475	C-7
92049-1483	E-3
92049-1493	E-7
92049-1501	C-4
92049-1519	C-7
92055-0006	C-4
92055-0016	C-11
92055-0082	D-4
92055-0083	D-4
92055-0131	F-9
92055-0185	C-10
92055-086	B-9
92055-1011	C-7
92055-1155	D-4
92055-1251	F-6
92055-1276	D-3
92055-1279	D-6
92055-1293	B-13
92055-1352	B-4
92055-1354	C-12
92055-1370	D-3
92055-1381	D-3
92055-1600	B-3
92055-1622	C-9
92057-0098	C-12
92057-0100	B-9
92057-0184	E-14
92058-0021	E-14
92062-1086	C-4
92065-058	C-7
92065-097	C-8
92066-0002	B-3
92066-0003	C-4
92066-0032	F-9
92066-0056	C-4
92066-0061	C-4
92066-0154	C-7
92066-1174	C-8
92066-1211	B-6
92066-1216	E-5
92066-1281	F-8
92069-0024	G-6
92069-1016	G-4
92069-1016	G-5
92069-1126	G-4
92070-0014	C-14
92071-0013	G-13
92071-0024	D-3
92071-1115	D-5
92072-0012	C-9
92072-1176	E-5
92072-1197	G-7
92072-1414	G-7
92075-1002	F-10
92075-1011	G-13
92075-1045	F-11
92075-1067	F-14
92075-125	F-10
92075-1634	G-13
92075-1690	D-5
92075-1690	F-10
92075-209	E-5
92081-1033	B-12
92081-1833	F-3
92092-0021	E-4
92093-0035	F-9
92093-0045	B-6
92093-0046	B-6
92093-0048	B-6
92093-1030	F-10
92104-0004	G-9
92104-1064	G-9
92106-1001	G-9
92107-005	G-9
92107-1053	G-9
92110-1015	G-9
92110-1132	G-9
92110-1144	G-9
92110-1147	G-9
92110-1148	G-9
92110-1152	G-9
92110-1153	G-9
92110-3703	G-9
92111-1051	G-9
92112-1001	G-9
92127-003	G-9
92139-0106	B-12
92139-0107	B-13
92139-0108	B-13
92139-0114	B-10
92139-0115	B-10
92139-0116	B-10
92139-0117	B-11
92139-0118	B-11
92139-0119	B-11
92139-0120	B-13
92143-1087	B-7
92143-1196	B-7
92143-1379	F-8
92143-1498	C-3
92143-1727	E-6
92144-1467	F-8
92144-1567	E-8
92144-1719	F-7
92144-1818	E-11
92144-1831	F-5
92144-1832	F-5
92144-1844	F-5
92144-1975	C-3
92145-0066	B-12
92145-0091	G-8
92145-0304	C-3
92145-0326	C-3
92145-1319	E-8
92150-1114	E-8
92150-1186	D-5
92150-1268	E-8
92150-1301	C-6
92150-1433	C-13
92150-1511	F-9
92150-1604	F-8
92150-1689	D-5
92150-1771	F-5
92150-1771	F-7
92150-1884	C-7
92151-1131	C-7
92151-1131	D-4
92151-1133	D-4
92151-1135	C-7
92151-1152	B-3
92151-1226	C-3
92151-1277	D-5
92151-1289	F-7
92151-1305	C-7
92151-1389	C-4
92151-1389	C-8
92151-1461	C-6
92151-1462	C-6
92151-1463	C-6
92151-1464	C-6
92151-1465	C-6
92151-1605	F-14
92151-1654	B-7
92151-1654	E-9
92151-1654	F-14
92151-1755	B-7
92151-1930	B-9
92151-1930	C-7
92151-1930	C-8
92151-1937	C-4
92151-1937	D-3
92152-0048	G-4
92152-0087	E-13
92152-0092	G-5
92152-0300	B-13
92152-0301	E-14
92152-0302	E-14
92152-0306	B-9
92152-0365	F-10
92152-0497	F-9
92152-0498	F-9
92152-0546	G-3
92152-0627	F-14
92152-0740	E-4
92152-0811	E-7
92152-0822	E-14
92152-0828	E-13
92152-1075	C-3
92152-1359	G-13
92153-0028	F-9
92153-0339	B-3
92153-0478	G-13
92153-0530	C-4
92153-0549	C-14
92153-0627	F-4
92153-0627	F-6
92153-0628	F-4
92153-0725	F-6
92153-0759	B-6
92153-0793	B-4
92153-0823	E-4
92153-0951	C-13
92153-0952	C-12
92153-0957	B-10
92153-0958	B-14
92153-0959	C-6
92153-0960	C-6
92153-0962	C-4
92153-0963	C-4
92153-0964	C-4
92153-0967	G-8
92153-0969	C-12
92153-0972	B-3
92153-1011	B-5
92153-1295	C-10
92153-1321	B-3
92153-1357	B-7
92153-1394	B-9
92153-1414	C-13
92153-1414	C-4
92153-1421	F-10
92153-1446	F-13
92153-1446	G-7
92153-1449	C-6
92153-1450	C-6
92153-1517	E-5
92153-1616	F-10
92153-1624	F-6
92153-1630	E-5
92153-1630	E-8
92153-1680	F-5
92153-1767	E-7
92153-1783	D-3
92153-1805	C-4
92154-0083	E-4
92154-0138	E-4
92154-0209	E-10
92154-0209	G-13
92154-0288	E-6
92154-0289	E-7
92154-0290	E-3
92154-0373	E-4
92160-1116	B-7
92160-1162	G-4
92160-1167	F-12
92160-1190	F-14
92160-1613	F-14
92160-1613	G-13
92161-0267	C-4
92161-0301	D-5
92161-0302	B-6
92161-0303	E-14
92161-0309	B-6
92161-0317	G-5
92161-0468	F-9
92161-0630	C-11
92161-0717	E-10
92161-0726	G-13
92161-0776	G-5
92161-0808	G-3
92161-0839	C-11
92161-0867	E-5
92161-0868	G-3
92161-1300	C-3
92161-1321	F-11
92170-1017	B-6
92170-1091	F-6
92170-1114	C-9
92170-1167	C-4
92170-1514	B-7
92170-1925	G-7
92171-0069	G-7
92171-0261	D-6
92171-0314	B-6
92171-0316	F-4
92171-0316	G-7
92171-0337	D-6
92171-0435	B-6
92171-0463	F-6
92171-0573	F-10
92171-0657	G-7
92171-0789	B-4
92171-0813	B-4
92171-0813	C-7
92171-0836	C-14
92171-0911	C-7
92171-0911	F-10
92171-0955	F-6

Part No.	Grid No.
92171-1089	B-3
92171-1415	G-7
92171-1424	G-7
92171-1559	G-7
92172-0009	B-6
92172-0064	C-9
92172-0175	G-4
92172-0183	F-8
92172-0209	B-14
92172-0320	F-4
92172-0322	F-14
92172-0322	G-3
92172-0343	G-5
92172-0395	G-6
92172-0441	F-12
92172-0481	G-5
92173-0059	C-4
92173-0109	F-13
92173-0110	B-7
92173-0128	F-6
92173-0216	F-13
92173-0218	G-7
92173-0241	F-13
92180-1014	B-8
92180-1016	B-8
92180-1018	B-8
92180-1020	B-8
92180-1022	B-8
92180-1024	B-8
92180-1026	B-8
92180-1028	B-8
92180-1030	B-8
92180-1032	B-8
92180-1034	B-8
92180-1036	B-8
92180-1038	B-8
92180-1040	B-8
92180-1042	B-8
92180-1044	B-8
92180-1046	B-8
92180-1048	B-8
92180-1050	B-8
92180-1052	B-8
92180-1054	B-8
92192-0225	C-4
92192-0231	B-6
92192-0232	B-6
92192-0264	B-6
92192-0325	B-6
92192-0828	F-10
92200-0006	G-13
92200-0043	E-8
92200-0115	C-6
92200-0157	F-14
92200-0157	G-13
92200-0164	G-6
92200-0165	G-6
92200-0220	C-13
92200-0221	B-13
92200-0222	B-13
92200-0274	C-14
92200-0281	E-3
92200-0291	B-13
92200-0296	E-14
92200-0328	E-5
92200-0363	B-3
92200-0363	B-5
92200-0519	E-7
92200-0537	E-3
92200-0568	E-5
92200-1063	C-6
92200-1065	B-13
92200-1240	B-13
92200-1278	B-13
92200-1388	E-9
92200-1464	F-9
92200-1480	G-13
92200-1480	G-3
92200-1480	G-4
92200-1487	B-12
92210-0007	G-8
92210-0188	D-3
92210-0222	B-13
92210-0223	B-5
92210-0276	E-14
92210-0578	E-3
92210-0579	E-3
92210-1081	E-4
92210-1114	B-7
92210-1352	G-13
92210-1397	E-6
99901-0023-01	G-14
99903-0023-01	G-14
99924-1435-01	G-14
99931-1516-01	G-14
99946-1063-01	G-14
99950-1071-01	G-14
99951-1052-01	G-14
99952-1039-01	G-14
99953-1060-01	G-14
99954-1072-01	G-14
99955-1050-01	G-14
99956-1036-01	G-14
99976-1515	G-14
99976-1516	G-14
99986-1527	G-14
99999-0270	C-9
99999-0272	C-9

Air Cleaner....B-6
Balancer....B-11
Brake Pedal....F-3
Cables....F-13
Camshaft(s)....B-9
Chain Cover....F-14
Chassis Electrical Equipment....G-7
Clutch....B-12
Cowling....G-13
Crankcase....C-4/C-5
Crankcase Bolt Pattern....C-6
Crankshaft....B-10
Cylinder....B-5
Cylinder Head....B-3
Cylinder Head Cover....B-4
Decals(Black)....G-11
Decals(Yellow)....G-12
Engine Cover(s)....C-7
Engine Mount....E-4
Footrests....E-8
Frame....E-3
Frame Fittings....E-5
Front Brake....F-5
Front Fender(s)....E-9
Front Fork....F-9
Front Hub....E-13
Front Master Cylinder....F-4
Fuel Injection....C-11
Fuel Pump....C-10
Fuel Tank....F-10
Gear Change Drum....B-14
Gear Change Mechanism....C-3
Generator....C-13
Handlebar....F-8
Headlight(s)....G-4
Ignition Switch....G-8
Ignition System....C-14
Labels....G-10
Manual....G-14
Meter(s)....F-12
Muffler(s)....B-7
Oil Pan....C-8
Oil Pump....C-12
Owner’s Tools....G-9
Piston(s)....B-5
Radiator....D-5
Rear Brake....F-7
Rear Fender(s)....E-10
Rear Hub....E-14
Rear Master Cylinder....F-6
Seat....F-11
Seat Cover....G-3
Shift Fork(s)....B-14
Shock Absorber....E-7
Side Covers....F-14
Stand(s)....E-11
Starter Motor....D-3
Suspension....E-7
Swingarm....E-6
Taillight(s)....G-5
Tensioner....B-9
Throttle....C-9
Tires....E-12
Transmission....B-13
Turn Signals....G-6
Valve(s)....B-8
Water Pipe....D-6
Water Pump....D-4

Air Cleaner....B-6
Balancer....B-11
Brake Pedal....F-3
Cables....F-13
Camshaft(s)....B-9
Chain Cover....F-14
Chassis Electrical Equipment....G-7
Clutch....B-12
Cowling....G-13
Crankcase....C-4/C-5
Crankcase Bolt Pattern....C-6
Crankshaft....B-10
Cylinder....B-5
Cylinder Head....B-3
Cylinder Head Cover....B-4
Decals(Black)....G-11
Decals(Yellow)....G-12
Engine Cover(s)....C-7
Engine Mount....E-4
Footrests....E-8
Frame....E-3
Frame Fittings....E-5
Front Brake....F-5
Front Fender(s)....E-9
Front Fork....F-9
Front Hub....E-13
Front Master Cylinder....F-4
Fuel Injection....C-11
Fuel Pump....C-10
Fuel Tank....F-10
Gear Change Drum....B-14
Gear Change Mechanism....C-3
Generator....C-13
Handlebar....F-8
Headlight(s)....G-4
Ignition Switch....G-8
Ignition System....C-14
Labels....G-10
Manual....G-14
Meter(s)....F-12
Muffler(s)....B-7
Oil Pan....C-8
Oil Pump....C-12
Owner’s Tools....G-9
Piston(s)....B-5
Radiator....D-5
Rear Brake....F-7
Rear Fender(s)....E-10
Rear Hub....E-14
Rear Master Cylinder....F-6
Seat....F-11
Seat Cover....G-3
Shift Fork(s)....B-14
Shock Absorber....E-7
Side Covers....F-14
Stand(s)....E-11
Starter Motor....D-3
Suspension....E-7
Swingarm....E-6
Taillight(s)....G-5
Tensioner....B-9
Throttle....C-9
Tires....E-12
Transmission....B-13
Turn Signals....G-6
Valve(s)....B-8
Water Pipe....D-6
Water Pump....D-4

Air Cleaner....B-6
Balancer....B-11
Brake Pedal....F-3
Cables....F-13
Camshaft(s)....B-9
Chain Cover....F-14
Chassis Electrical Equipment....G-7
Clutch....B-12
Cowling....G-13
Crankcase....C-4/C-5
Crankcase Bolt Pattern....C-6
Crankshaft....B-10
Cylinder....B-5
Cylinder Head....B-3
Cylinder Head Cover....B-4
Decals(Black)....G-11
Decals(Yellow)....G-12
Engine Cover(s)....C-7
Engine Mount....E-4
Footrests....E-8
Frame....E-3
Frame Fittings....E-5
Front Brake....F-5
Front Fender(s)....E-9
Front Fork....F-9
Front Hub....E-13
Front Master Cylinder....F-4
Fuel Injection....C-11
Fuel Pump....C-10
Fuel Tank....F-10
Gear Change Drum....B-14
Gear Change Mechanism....C-3
Generator....C-13
Handlebar....F-8
Headlight(s)....G-4
Ignition Switch....G-8
Ignition System....C-14
Labels....G-10
Manual....G-14
Meter(s)....F-12
Muffler(s)....B-7
Oil Pan....C-8
Oil Pump....C-12
Owner’s Tools....G-9
Piston(s)....B-5
Radiator....D-5
Rear Brake....F-7
Rear Fender(s)....E-10
Rear Hub....E-14
Rear Master Cylinder....F-6
Seat....F-11
Seat Cover....G-3
Shift Fork(s)....B-14
Shock Absorber....E-7
Side Covers....F-14
Stand(s)....E-11
Starter Motor....D-3
Suspension....E-7
Swingarm....E-6
Taillight(s)....G-5
Tensioner....B-9
Throttle....C-9
Tires....E-12
Transmission....B-13
Turn Signals....G-6
Valve(s)....B-8
Water Pipe....D-6
Water Pump....D-4

Air Cleaner....B-6
Balancer....B-11
Brake Pedal....F-3
Cables....F-13
Camshaft(s)....B-9
Chain Cover....F-14
Chassis Electrical Equipment....G-7
Clutch....B-12
Cowling....G-13
Crankcase....C-4/C-5
Crankcase Bolt Pattern....C-6
Crankshaft....B-10
Cylinder....B-5
Cylinder Head....B-3
Cylinder Head Cover....B-4
Decals(Black)....G-11
Decals(Yellow)....G-12
Engine Cover(s)....C-7
Engine Mount....E-4
Footrests....E-8
Frame....E-3
Frame Fittings....E-5
Front Brake....F-5
Front Fender(s)....E-9
Front Fork....F-9
Front Hub....E-13
Front Master Cylinder....F-4
Fuel Injection....C-11
Fuel Pump....C-10
Fuel Tank....F-10
Gear Change Drum....B-14
Gear Change Mechanism....C-3
Generator....C-13
Handlebar....F-8
Headlight(s)....G-4
Ignition Switch....G-8
Ignition System....C-14
Labels....G-10
Manual....G-14
Meter(s)....F-12
Muffler(s)....B-7
Oil Pan....C-8
Oil Pump....C-12
Owner’s Tools....G-9
Piston(s)....B-5
Radiator....D-5
Rear Brake....F-7
Rear Fender(s)....E-10
Rear Hub....E-14
Rear Master Cylinder....F-6
Seat....F-11
Seat Cover....G-3
Shift Fork(s)....B-14
Shock Absorber....E-7
Side Covers....F-14
Stand(s)....E-11
Starter Motor....D-3
Suspension....E-7
Swingarm....E-6
Taillight(s)....G-5
Tensioner....B-9
Throttle....C-9
Tires....E-12
Transmission....B-13
Turn Signals....G-6
Valve(s)....B-8
Water Pipe....D-6
Water Pump....D-4

Air Cleaner....B-6
Balancer....B-11
Brake Pedal....F-3
Cables....F-13
Camshaft(s)....B-9
Chain Cover....F-14
Chassis Electrical Equipment....G-7
Clutch....B-12
Cowling....G-13
Crankcase....C-4/C-5
Crankcase Bolt Pattern....C-6
Crankshaft....B-10
Cylinder....B-5
Cylinder Head....B-3
Cylinder Head Cover....B-4
Decals(Black)....G-11
Decals(Yellow)....G-12
Engine Cover(s)....C-7
Engine Mount....E-4
Footrests....E-8
Frame....E-3
Frame Fittings....E-5
Front Brake....F-5
Front Fender(s)....E-9
Front Fork....F-9
Front Hub....E-13
Front Master Cylinder....F-4
Fuel Injection....C-11
Fuel Pump....C-10
Fuel Tank....F-10
Gear Change Drum....B-14
Gear Change Mechanism....C-3
Generator....C-13
Handlebar....F-8
Headlight(s)....G-4
Ignition Switch....G-8
Ignition System....C-14
Labels....G-10
Manual....G-14
Meter(s)....F-12
Muffler(s)....B-7
Oil Pan....C-8
Oil Pump....C-12
Owner’s Tools....G-9
Piston(s)....B-5
Radiator....D-5
Rear Brake....F-7
Rear Fender(s)....E-10
Rear Hub....E-14
Rear Master Cylinder....F-6
Seat....F-11
Seat Cover....G-3
Shift Fork(s)....B-14
Shock Absorber....E-7
Side Covers....F-14
Stand(s)....E-11
Starter Motor....D-3
Suspension....E-7
Swingarm....E-6
Taillight(s)....G-5
Tensioner....B-9
Throttle....C-9
Tires....E-12
Transmission....B-13
Turn Signals....G-6
Valve(s)....B-8
Water Pipe....D-6
Water Pump....D-4

Air Cleaner....B-6
Balancer....B-11
Brake Pedal....F-3
Cables....F-13
Camshaft(s)....B-9
Chain Cover....F-14
Chassis Electrical Equipment....G-7
Clutch....B-12
Cowling....G-13
Crankcase....C-4/C-5
Crankcase Bolt Pattern....C-6
Crankshaft....B-10
Cylinder....B-5
Cylinder Head....B-3
Cylinder Head Cover....B-4
Decals(Black)....G-11
Decals(Yellow)....G-12
Engine Cover(s)....C-7
Engine Mount....E-4
Footrests....E-8
Frame....E-3
Frame Fittings....E-5
Front Brake....F-5
Front Fender(s)....E-9
Front Fork....F-9
Front Hub....E-13
Front Master Cylinder....F-4
Fuel Injection....C-11
Fuel Pump....C-10
Fuel Tank....F-10
Gear Change Drum....B-14
Gear Change Mechanism....C-3
Generator....C-13
Handlebar....F-8
Headlight(s)....G-4
Ignition Switch....G-8
Ignition System....C-14
Labels....G-10
Manual....G-14
Meter(s)....F-12
Muffler(s)....B-7
Oil Pan....C-8
Oil Pump....C-12
Owner’s Tools....G-9
Piston(s)....B-5
Radiator....D-5
Rear Brake....F-7
Rear Fender(s)....E-10
Rear Hub....E-14
Rear Master Cylinder....F-6
Seat....F-11
Seat Cover....G-3
Shift Fork(s)....B-14
Shock Absorber....E-7
Side Covers....F-14
Stand(s)....E-11
Starter Motor....D-3
Suspension....E-7
Swingarm....E-6
Taillight(s)....G-5
Tensioner....B-9
Throttle....C-9
Tires....E-12
Transmission....B-13
Turn Signals....G-6
Valve(s)....B-8
Water Pipe....D-6
Water Pump....D-4